Part No. 83014

Cornado Popping Unit

36, 48 & 60 oz. Domestic Units

Instruction Manual



GOLD MEDAL®

FUNFOOD EQUIPMENT & SUPPLIES

Cincinnati, OH 45241-4807 USA

SAFETY PRECAUTIONS

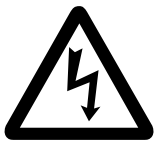

⚠ DANGER

Machine must be properly grounded to prevent electrical shock to personnel. Failure to do so could result in serious injury, or death.
Do NOT immerse any part of this equipment in water.
Do NOT use excessive water when cleaning.
Keep cord and plug off the ground and away from moisture.
Always unplug the equipment before cleaning or servicing.

008GEND1112

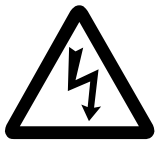

⚠ DANGER

Improper installation, adjustment, alteration, service or maintenance can cause property damage, injury or death. Any alterations to this equipment will void the warranty and may cause a dangerous condition. NEVER make alterations to this equipment. Read the Installation, Operating, and Maintenance Instructions thoroughly before installing, servicing, or operating this equipment.
Make sure all machine switches are in the OFF position before plugging the equipment into the receptacle.

014GEND1112



⚠ WARNING

To avoid burns, do NOT touch the kettle or any heated surface.
Do NOT place or leave objects in contact with heated surfaces.

013PW1112



⚠ WARNING

ALWAYS wear safety glasses when servicing this equipment.

010GENW1112



⚠ CAUTION

Do NOT allow direct contact of this equipment by the public when used in food service locations. Only personnel trained and experienced in the equipment operation may operate this equipment.
Carefully read all instructions before operation.

012GENC1112



⚠ CAUTION

This machine is NOT to be operated by minors.

007GENC0413

NOTE: Improvements are always being made to Gold Medal's equipment. This information may not be the latest available for your purposes. It is critical that you call Gold Medal's Technical Service Department at 1-800-543-0862 for any questions about your machine operations, replacement parts, or any service questions. *(Gold Medal Products Co. does not assume any liability for injury due to careless handling and/or reckless* operation of this equipment.)

Installation Instructions

Checking Shipment

Unpack all cartons and check thoroughly for any damage which may have occurred in transit. Damage claims should be filed immediately with the transportation company. Gold Medal is not responsible for damage that occurs in transit.

Domestic models only: 120v/208v or 120v/240v 60 Hz.

A **30 amp** – 4 wire wall receptacle is shipped with each **36 oz.** machine. This receptacle will accept the attachment plug on the popper and must be used. Your electrician must furnish sufficient current for proper operation of your machine. The **36 oz.** Cornado must be operated on a 30 amp dedicated, and circuit protected, line. (note: The Cornado "uses" both "hot to neutral" legs, 120v. The machine does not "use" the 208v or 240v, "hot to hot" connection.

A 50 amp – 4 wire wall receptacle is shipped with each **48 & 60 oz.** machine. This receptacle will accept the attachment plug on the popper and must be used. Your electrician must furnish sufficient current for proper operation of your machine. The **48 or 60 oz.** Cornado must be operated on a 50 amp dedicated, and circuit protected, line. (note: The Cornado "uses" both "hot to neutral" legs, 120v. The machine does not "use" the 208v or 240v, "hot to hot" connection.

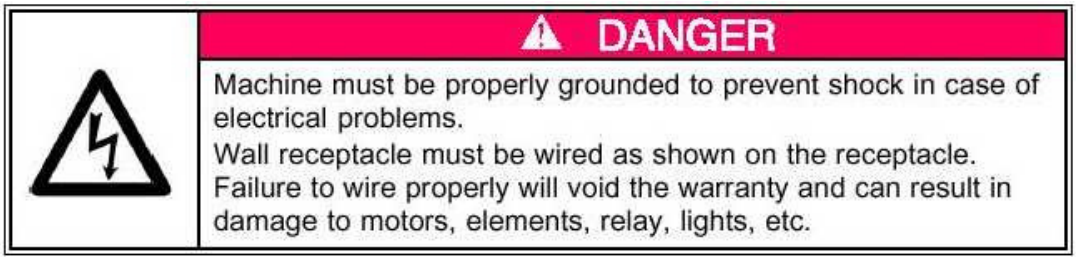

Final Preparations



The popcorn machine was adjusted, inspected, and tested before it left the factory.

Connect the clear oil line from the pump to the aluminum line from the popper with the supplied hose clamp. Connect the 6 pin connector from the popper to the receptacle on the oil pump. Both Bucket pump (2114E) and Bag-in-a-Box pump (2257) have the same receptacle.

Follow the instructions provided in the oil pump manual to set the oil delivery amount. The proper amount of oil for the 36oz. Cornado is 9 to 12 ounces. The proper amount of oil for the 48 oz. Cornado is 12 to 16 ounces. The proper amount of oil for the 60 oz. Cornado is 15 to 20 ounces.

To check for proper amount of oil, and assure oil is liquid, dispense a "shot" into a measuring cup.

Mounting Instructions

Note: 10 inch minimum clearance required between popping kettle – and fire proof wall.

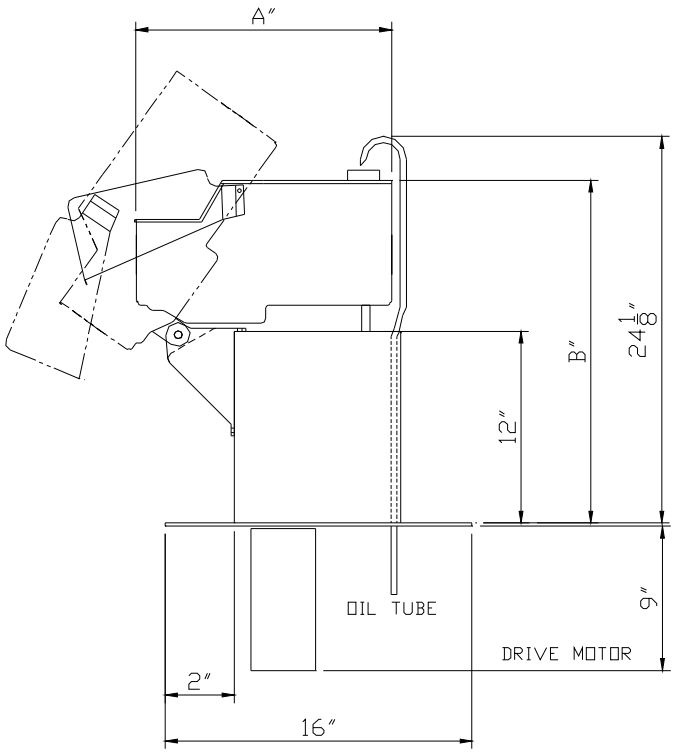

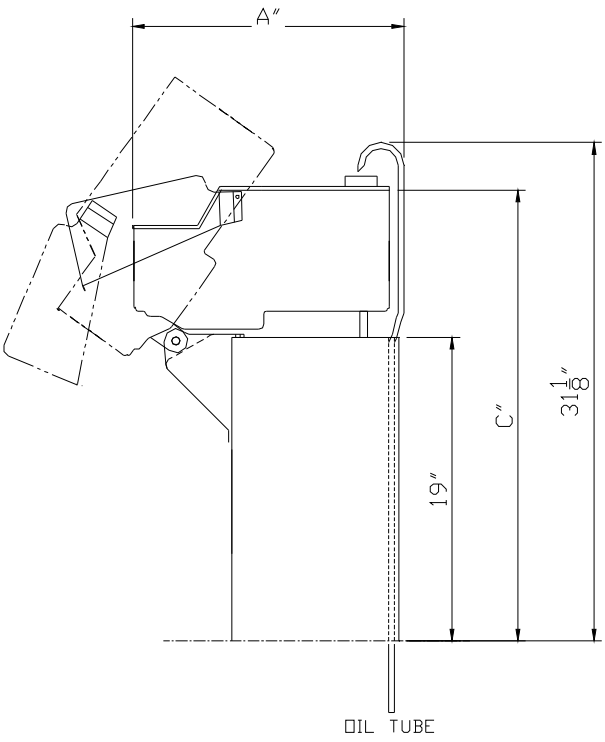

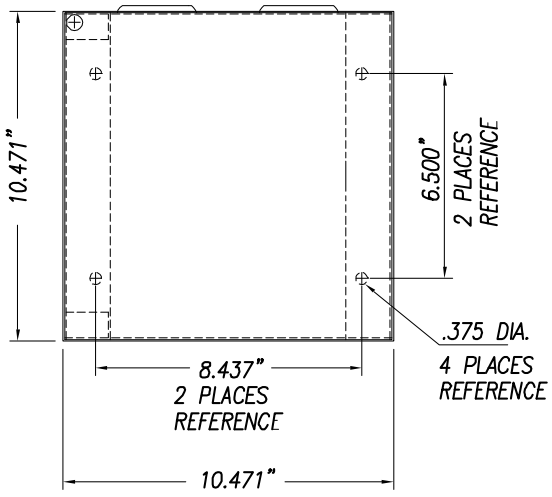

Hole Locations

(Holes located on the bottom interior of the Pedestal)

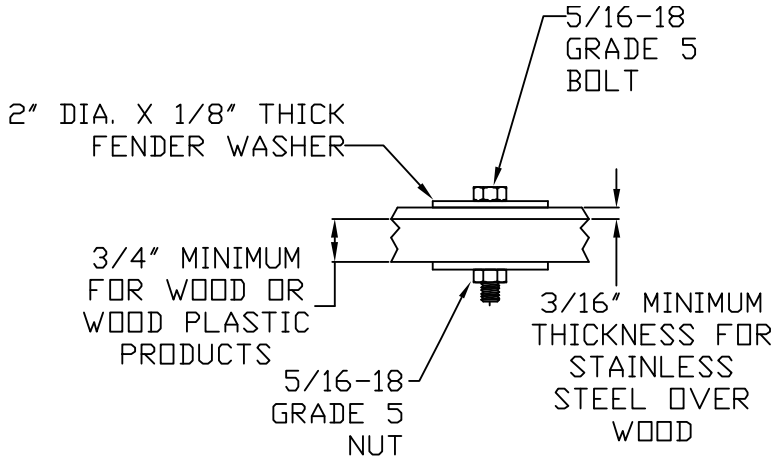

COUNTER MOUNTING REQUIREMENTS

Setting the Amount of Popping Oil with a Gold Medal BIB System

In March 2003, we introduced the model 2257 with the E-Z Set control.

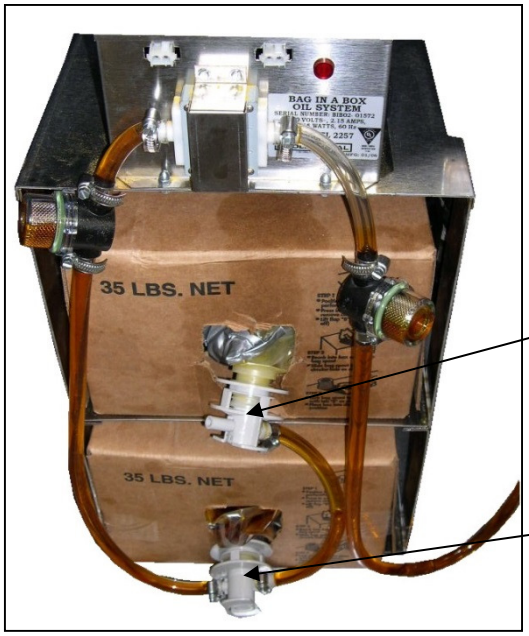

Note: When connecting the bag-in-box system, you must be sure to connect the bag connectors as shown in the picture to the left.

The dead-leg connector (With only one hose connected to it) must be installed on the top box.

The Pass-thru connector (With two hoses connected to it) must be installed on the bottom box.

With this system, it is not necessary to set a timer. To adjust the oil amount, follow these instructions:

Holding down the RED *Oil Dispense* push button (on the popper) while turning on the *Oil System Master* switch (on the popper), **and continuing to hold the RED *Oil Dispense* button in for 5 seconds**, puts the unit in the program mode.

When in the program mode, press and release the oil *Dispense* switch to start the oil flowing. When the correct amount of oil has been dispensed into the measuring cup, push the oil *Dispense* switch again to stop the oil flow. The oil amount can be "topped off" by pushing the oil *Dispense* switch on/off as many times as needed to finalize the oil amount. Turning the *Oil System Master* switch off and then back on puts the unit in the regular mode. The unit will now dispense the "programmed" amount of oil when the oil *Dispense* switch is pushed. The oil light will light only when the oil pump is on.

You will need to perform this procedure with the oil lines full of oil. Otherwise, you are setting both the amount of oil that goes in the kettle plus the amount of oil to fill the lines. Just fill the lines using the process above, then reset the amount as described above.

Notes:

- Model 2257D is has the capability of "remembering" two different settings for poppers with the "Salt/Sweet" option.
- For Salt/Sweet models, just put the switch in the "salt" position, and set the oil amount as described above. Then put the switch in the "sweet" position and repeat the setting procedure. The pump will remember both settings.

Controls and Their Functions

Oil System Master Switch

Sends power to the oil pump, either the Bucket Pump or Bag-in-a-Box models. The warmer/blower on the oil pump is activated. It may be desirable to keep this switch on at night, if you have problems keeping the coconut oil liquid. Coconut oil will congeal at temperatures below approximately 76º F [24º C].

Salt-Sweet Switch (If Equipped)

Changes the temperature 40ºF lower for the sweet option.
Note: When making sweet corn, follow the label instructions on jar of compound "S". (Compound "S" is available from Gold Medal Products Co. – item number 2320.)

"Red" Oil Dispense Momentary Switch

When pushed, will dispense the predetermined amount of oil into the kettle.

Kettle Motor

Operates the kettle agitator motor.

Kettle Heat Switch

Operates the heating elements in the popping kettle by supplying power to the Big Eye Electronic Temperature control board.

Load/Dump Indicator (Yellow Light & Audible Signal)

Alerts the operator to:

1. Load the corn and oil *or*
2. Dump the popped corn from the kettle *or*
3. Turn off the kettle heat switch if they are done popping corn

Popping Corn

1. Turn on Kettle Heat, Motor, and Oil system master switches.
2. When popping with coconut oil, be sure the oil is liquid. Dispense oil into a measuring cup first to ensure proper oil amount. See page 5 for setting oil pump.
3. When the kettle is ready (about 5-8 minutes), the Yellow Light and Audible Signal will turn on. Lift the kettle lid and pour in corn (use the supplied corn cup) and Flavacol, (use supplied scoop as well)
4. Press the RED oil pump button. The proper amount of oil is pumped into the kettle. The Light and Signal will turn off.
5. When the popcorn has completed popping, the Light and Signal will turn on. Dump the Popcorn.
6. On the final kettle of corn, turn the "KETTLE HEAT" switch off, just as the lid are forced open by the popping corn. Turning the kettle heat switch off allows the heat to dissipate as the final batch is popped. (This results in less smoke on the last batch.)
7. **Note: When making sweet corn, follow the label instructions on jar of compound "S". (Compound "S" is available from Gold Medal Products Co. – item number 2320.)**

Remember:
If the Yellow Load - Dump light is turned on and the Signal is sounding *one of the* following actions should be taken:

1. Load the corn and oil *or*
2. Dump the popped corn from the kettle *or*
3. Turn off the kettle heat switch if you are done popping corn

When you are finished popping, make sure "KETTLE HEAT" and "KETTLE MOTOR" switches are turned "OFF".

NEVER LEAVE THE HEAT ON WHEN YOU ARE NOT POPPING!

CARE AND CLEANING INSTRUCTIONS



Good sanitation practice demands that all food preparation equipment be cleaned regularly. A clean looking, well-kept machine is one of the best ways of advertising your product.

Note: It is extremely important to follow all of the cleaning procedures, otherwise equipment failure will result. The warranty does not cover parts that are damaged due to improper cleaning, and parts will be damaged if the cleaning procedures are not followed.

Daily Kettle Cleaning Instructions

1. In between batches of popping corn, wipe the kettle with a clean cloth. It is easy to keep the outside clean when the kettle is warm and the oil is not baked on**.**

   CAUTION: The hot kettle will cause burns if you touch it with your hand.

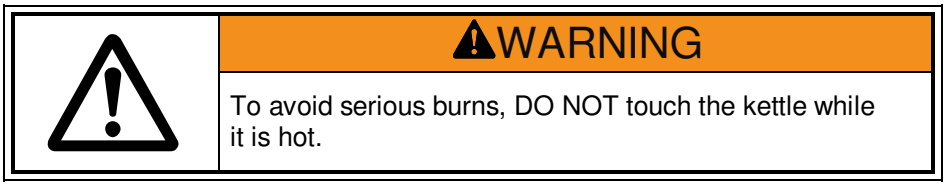

2. Every night, mix Gold Medal's Heat'n Kleen solution (Item No. 2095) 2 tablespoons per gallon of water. It is not necessary use the entire gallon at once**;** only use enough to fill the kettle 1/2 inch deep.
3. Turn the kettle heat ON. When the water starts to boil, turn the kettle heat OFF.
4. Allow to cool for 30 minutes, and then dump the solution into a bucket and wipe the inside of the kettle with a clean cloth.

   If the kettle is very dirty you may need to repeat more than once or allow solution to work overnight. The next morning, dump the solution into a bucket and wipe the inside of the kettle with a clean cloth.
5. With the unit OFF and unplugged, wipe the kettle lead cord with a clean SLIGHTLY damp cloth. **DO NOT** get moisture into the kettle lead-in cord. Sever damage will result.

Daily Unit Cleaning Instructions

1. With the machine OFF, unplug the unit and allow it to cool before attempting to clean.
2. Make sure to clean all pans/accessories in order to sanitize them before each use.
3. Wipe the stainless steel parts with a clean cloth and cleaner designed for stainless steel, such as Gold Medal Watchdog Stainless Cleaner (Item No. 2088).

   DO NOT use oven cleaners or abrasive materials as they will damage parts of the machine.

4. Clean the glass panels with glass cleaner. Gold Medal Watchdog Glass Cleaner (Item No. 2588) is recommended.

   Ammonia cleaners will damage the plastic doors. Use only non-ammonia cleaners, such as Gold Medal Watchdog Glass Cleaner (Item No. 2588).

Weekly Agitator and Hub Seal Assembly Cleaning Instructions

Important: For proper machine performance, keep agitator and hub assembly clean. Follow the steps below weekly to ensure proper machine performance.

Steps to Clean Agitator and Hub Assembly

Step 1: On the bottom side of the kettle, hold the Agitator Shaft firmly with Channel Lock pliers.

NOTE: The shaft has a left handed thread.

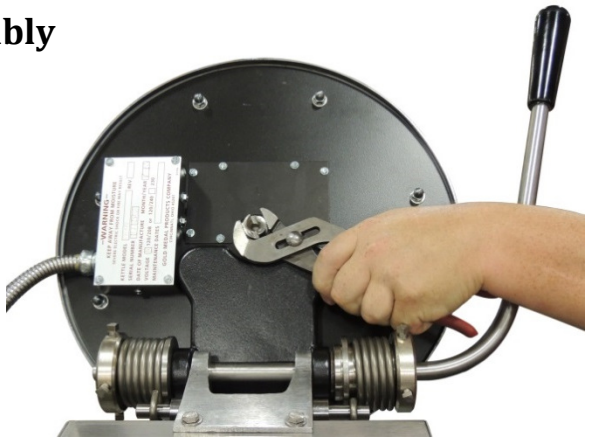

Step 2: To loosen the Agitator Assembly, tap the agitator's welded bar with a rubber mallet in a CLOCKWISE direction, and unscrew to remove.

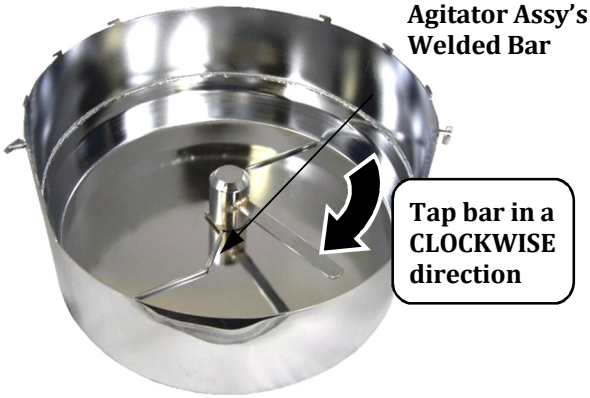

Step 3: Leave the Packing Cage and Packing Cord intact. ONLY wipe hub assembly surfaces to remove product residue, and clean the inside of the agitator hub to remove any nicks and carbon build-up.

If packing cage is removed, then the packing cord should be replaced (see Replacing the Packing Cord on Kettle Hub in the Maintenance section of this manual.)

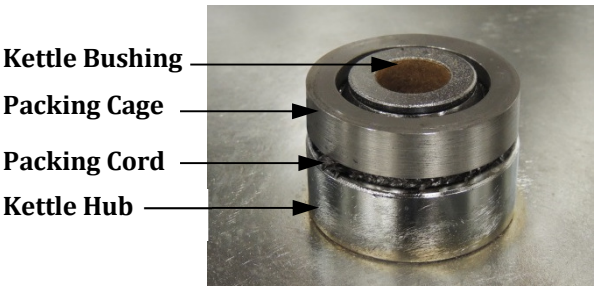

Kettle Hub view under Agitator Assy.

Step 4: Reinstall agitator assembly for use.

MAINTENANCE INSTRUCTIONS



⚠ DANGER

Improper installation, adjustment, alteration, service, or maintenance can cause property damage, injury or death. Read the installation, Operating, and Maintenance Instructions thoroughly before installing or servicing this equipment.



⚠ DANGER

Do Not immerse the equipment in water. Unplug your machine before servicing.



⚠ WARNING

Adequate eye protection must be used when servicing this equipment to prevent eye injury.



⚠ CAUTION

THE FOLLOWING SECTIONS OF THIS MANUAL ARE INTENDED ONLY FOR QUALIFIED SERVICE PERSONNEL WHO ARE FAMILIAR WITH ELECTRICAL EQUIPMENT. THESE ARE NOT INTENDED FOR THE OPERATOR.

Removing Agitator Assembly and Shaft Maintenance

The kettle's agitator shaft should be removed every 3 months and lubricated with Never Seez® (Item No. 68751). See below for steps to remove and lubricate the agitator shaft.

Steps to Remove the Agitator Assembly and Lubricate Shaft

Step 1: On the bottom side of the kettle, hold the Agitator Shaft firmly with Channel Lock pliers.

NOTE: The shaft has a left handed thread.

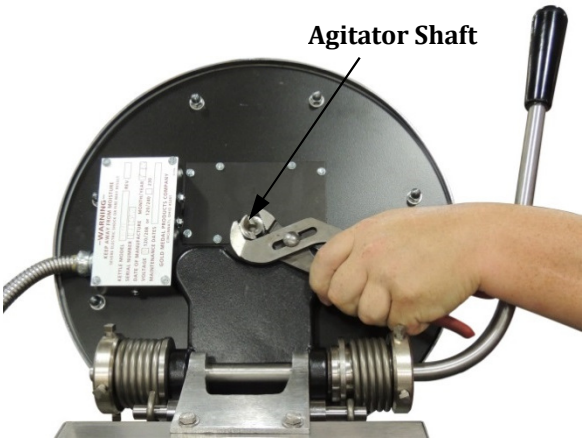

Step 2: To loosen the Agitator Assembly, tap the agitator's welded bar with a rubber mallet in a CLOCKWISE direction, and unscrew to remove.

Leave the Packing Cage/Packing Cord on the kettle hub intact. If it is removed, then the packing cord should be replaced (see Replacing the Packing Cord on Kettle Hub in the Maintenance section of this manual.)

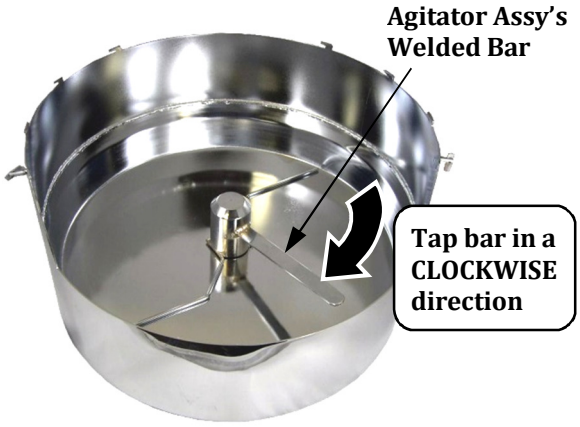

Step 3: Remove the agitator shaft and lubricate with Never Seez® (Item No. 68751). Apply a small amount on the slope and side of pin of the matching shaft.

Step 4: Reassemble in reverse order for use.

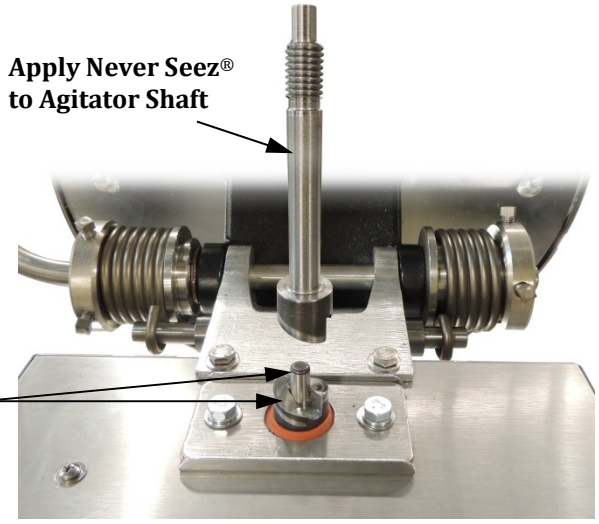

Replacing the Packing Cord on Kettle Hub

The kettle hub assembly (Packing Cage and Packing Cord) is designed for long use if not disturbed. When the unit is properly maintained, the packing cord should not need to be changed. If it is removed, or if the kettle bushings are replaced, then the packing cord should be replaced.

Follow the steps below to replace the packing cord.

Steps to Replace Packing Cord

Step 1: Remove agitator assembly (see Removing Agitator Assembly section), then remove the packing cage and the old packing cord.

For older models which have an oil seal, remove the oil seal from inside the agitator hub and replace with the Cornado Packing Kit (Item No. 69305) as described here.

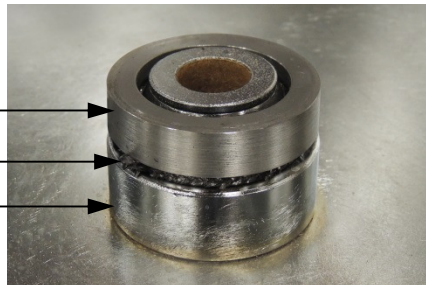

Step 2: Clean the surfaces of the kettle hub with a Scotch Brite pad or a fine sand paper.

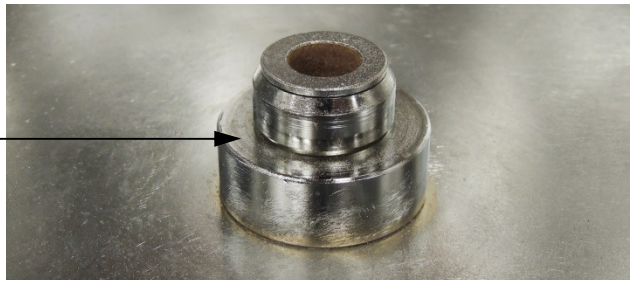

Step 3: Wind the new packing cord on the hub. Start at the bottom, and wind up in a CLOCKWISE direction.

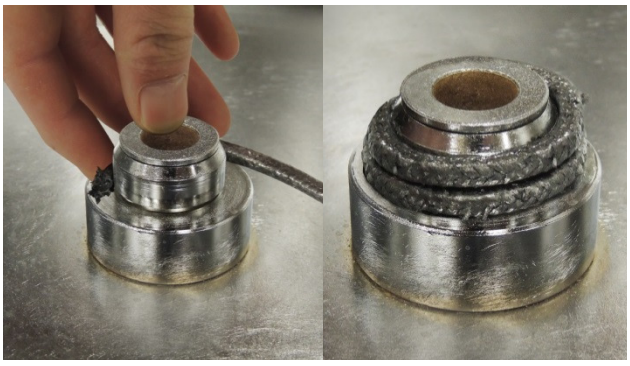

Step 4: Push packing cage down onto the packing cord and rotate CLOCKWISE.

Step 5: Before reinstalling agitator assembly, clean the inside of the agitator hub to remove all nicks and carbon build-up.



Electronic temperature Control (Domestic)

Operation

The temperature control is factory set to stop the power to the kettle when the thermocouple reaches setpoint. This is also the ideal point to dump the popped corn out of the kettle. On the first start-up, this is the ideal time to load the corn and oil. Therefore, if the Kettle Heat Switch is turned ON and the buzzer is sounding, ***one*** of the following actions should be taken:

- Load the corn and oil ***or***
- Dump the popped corn from the kettle ***or***
- Turn OFF the Kettle Heat Switch if you are finished popping corn.

Adjustment of Electronic Control

This unit has an electronic kettle control with 2 thermocouples (TC), one for control and one for limit. There are no mechanical thermostats in this kettle.

There are (4) factory adjustments on the control:

1. Control Setpoint Temperature – This is factory set, **DO NOT adjust**.
2. Signal to Dump – If you want the signal to dump to be a little sooner or later, you can adjust the Kettle Dump potentiometer (see image below). Turn clockwise (CW) to signal sooner, counterclockwise (CCW) to signal later.
3. The patented Overshoot circuit is tuned for the kettle, **DO NOT adjust** this potentiometer.
4. The Audible Signal to Dump has three options; full volume, half volume, no sound (yellow light only). Adjustments are made by jumper positions (see image below). The unit is shipped with full volume.

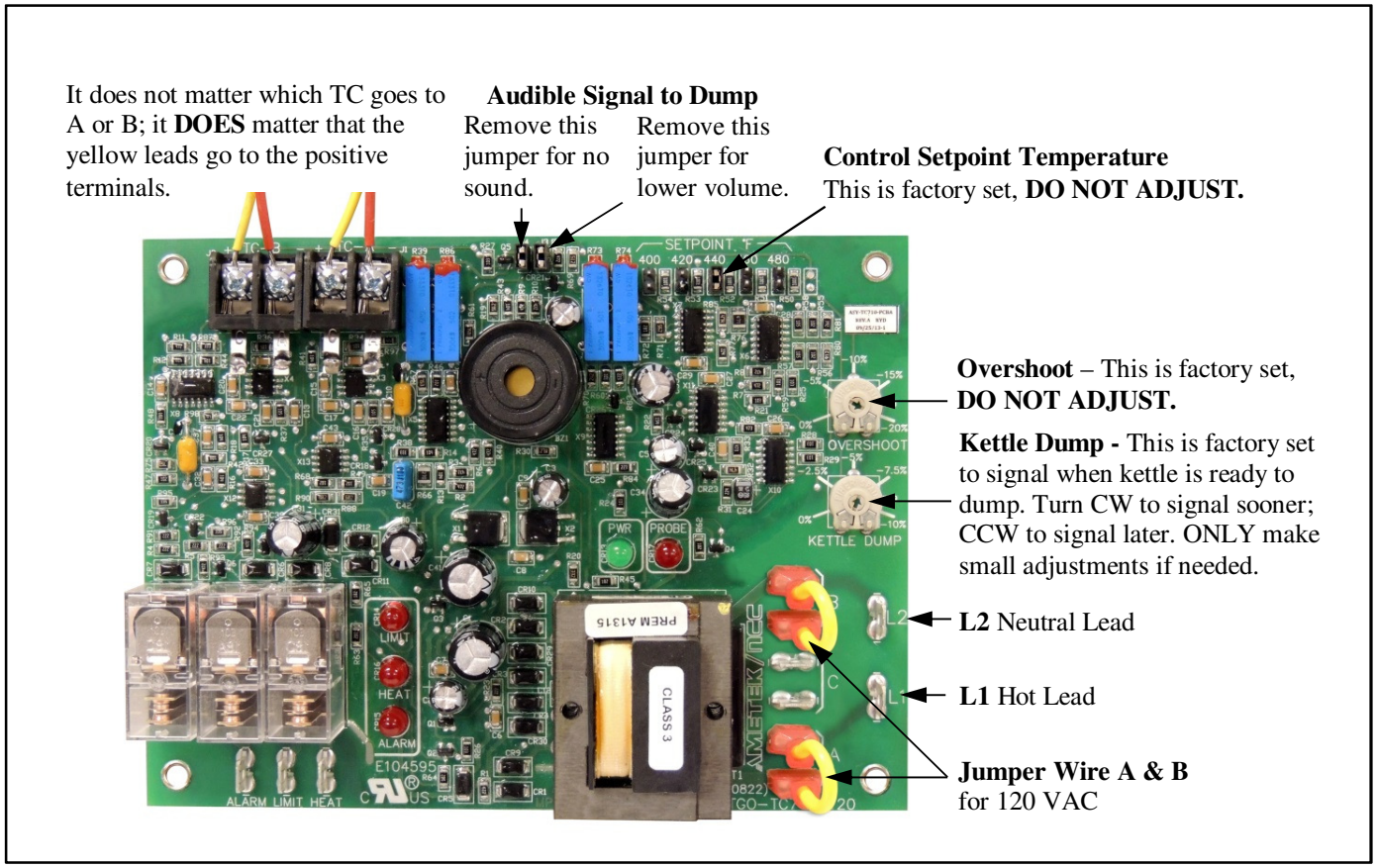

Kettle Drive Shaft Alignment

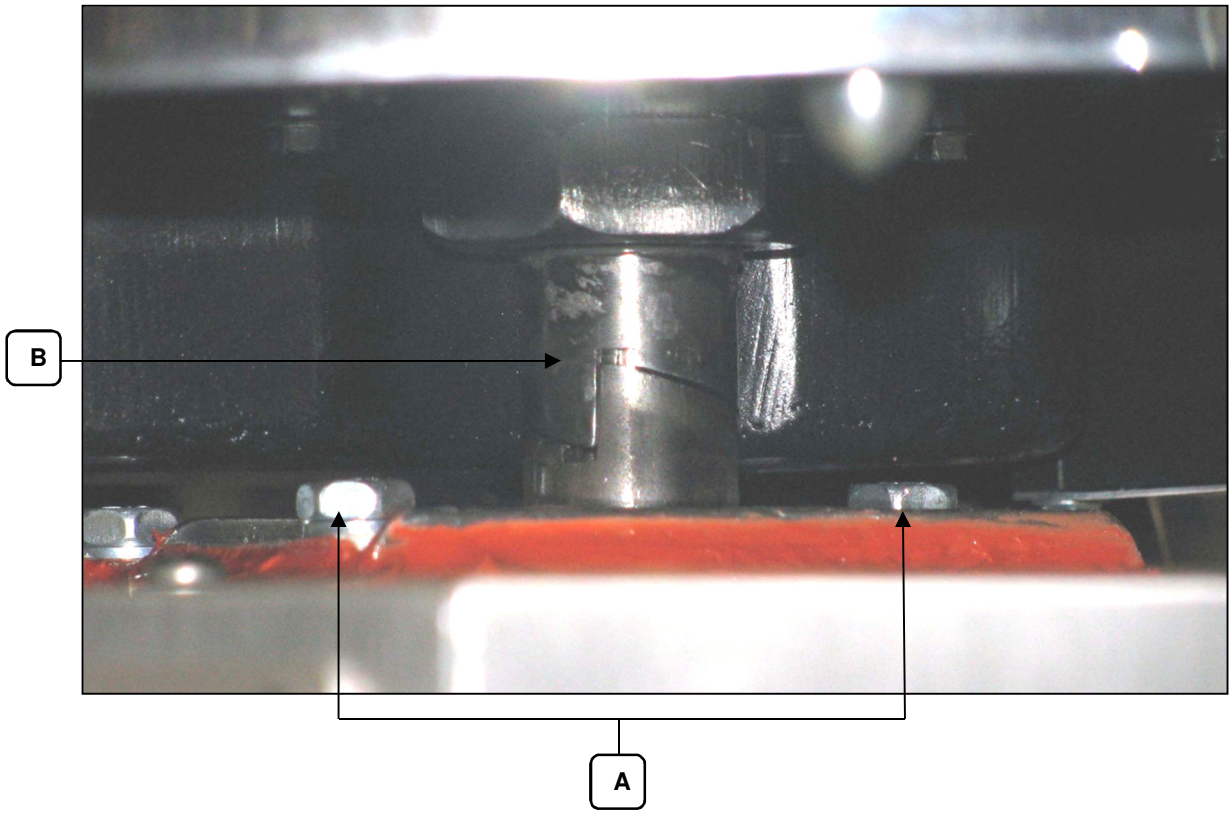

To adjust the lower agitator shaft, loosen the two hex bolts for the adjusting plate. (Figure A) (It may be necessary to use a socket/wrench on the hex nuts located underneath/inside the pedestal.) Adjust the plate back and forth, and side-to-side, as necessary – until the lower shaft lines up with the upper shaft in the kettle. It's important to have the two shafts aligned with one another, and that the two shafts do not "bind" when the kettle is dumped. (Figure B) Once aligned properly, re-tighten the two bolts on the adjusting plate.

ORDERING SPARE PARTS

* **Always speak to a Gold Medal Products Technical Service Advisor before ordering any parts to help ensure accuracy for your product. Included diagrams may not be the latest information.**

1. Identify the needed part by checking it against the photos, illustrations, and/or parts list.
2. When ordering, please include part number, part name, and quantity needed.
3. Please include your model name, serial number, and date of manufacture (located on the machine nameplate) with your order.
4. Address all parts orders to:

Parts Department
Gold Medal Products Co.
10700 Medallion Drive
Cincinnati, Ohio 45241-4807

Or, place orders by phone or online:

(800) 543-0862
(513) 769-7676
Fax: (513) 769-8500
E-mail: info@gmpopcorn.com
Web Page: gmpopcorn.com

Parts Breakdown 36, 48 & 60 Oz. Units

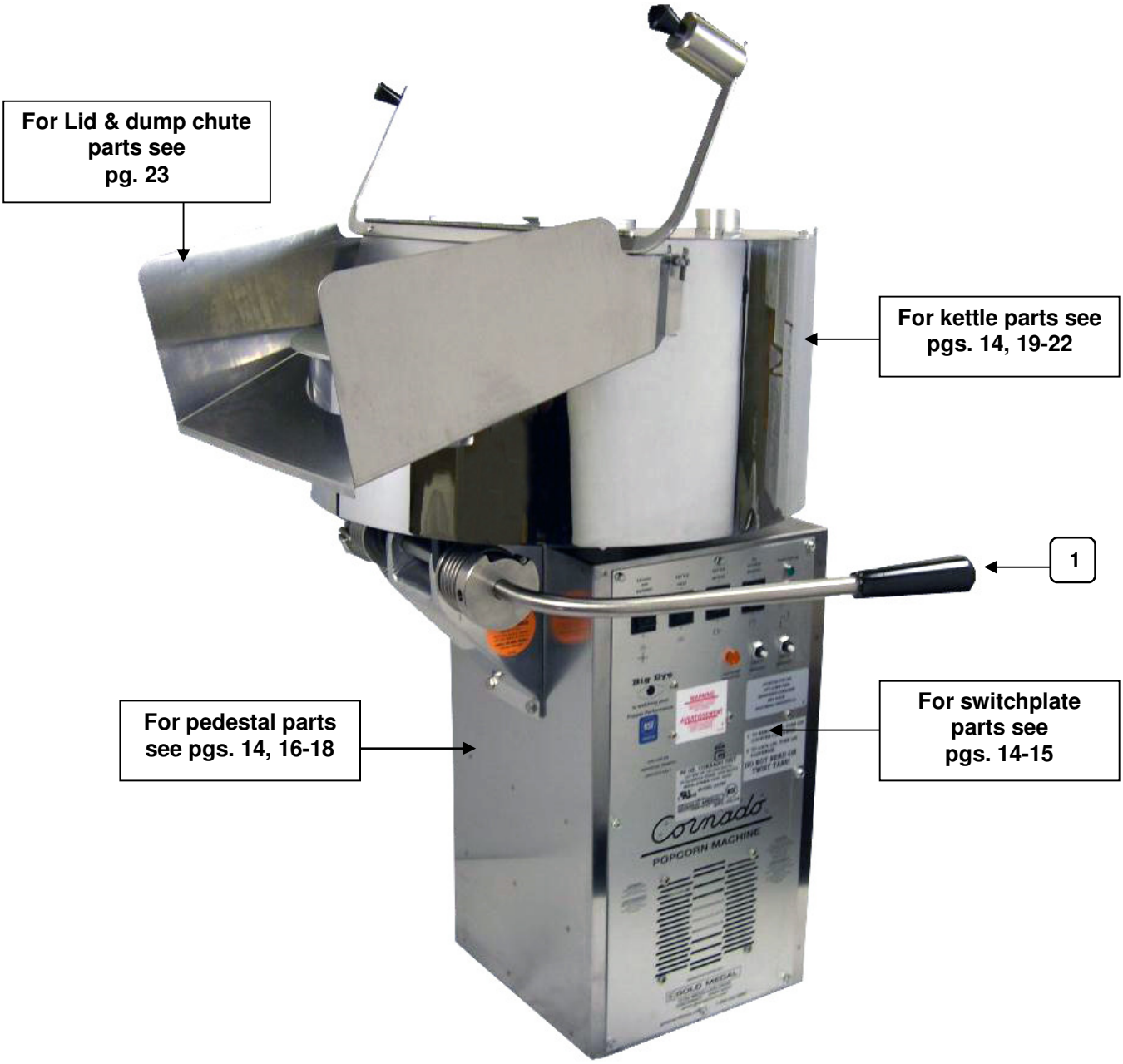

Parts – Continued

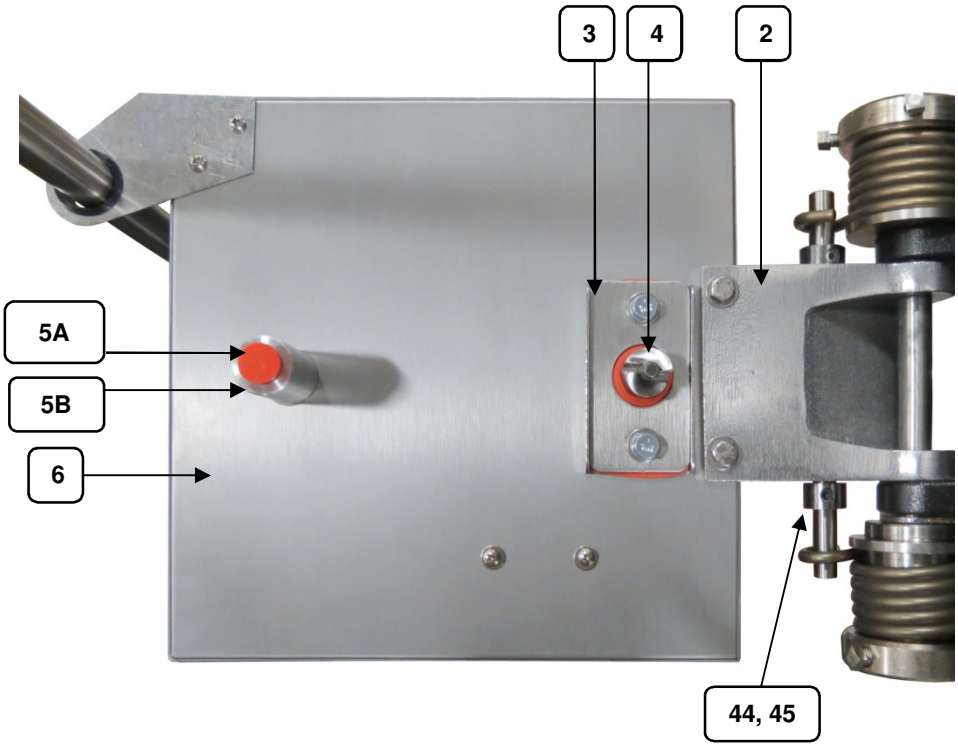

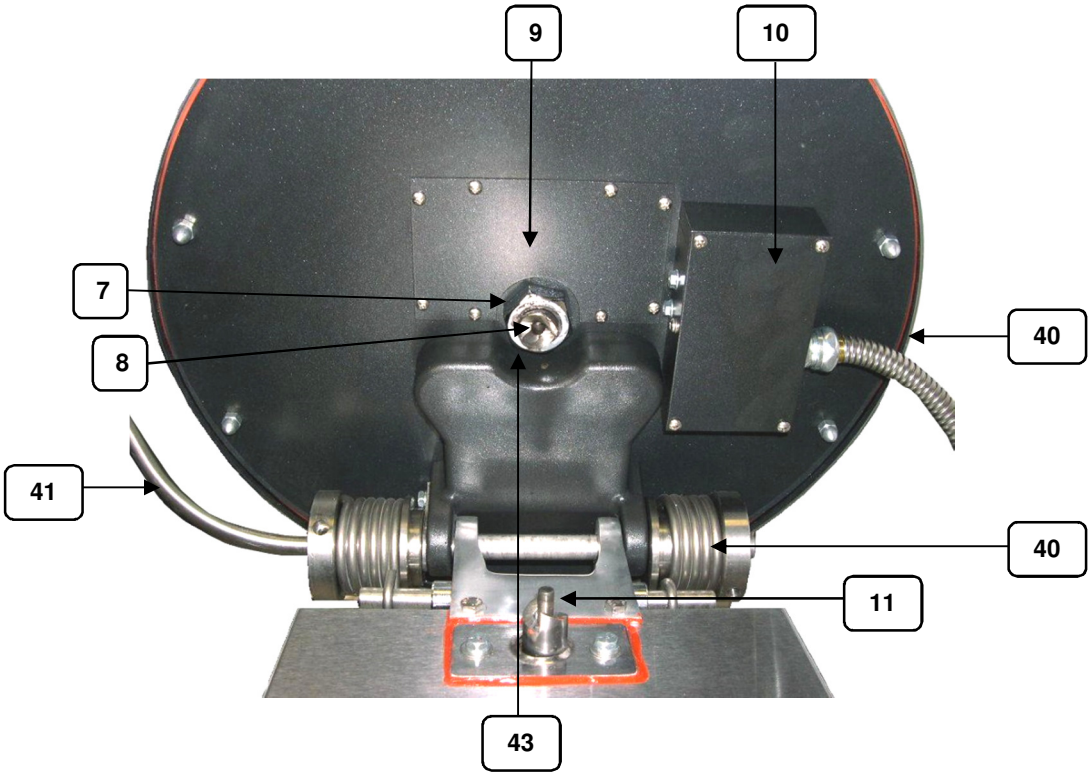

Switchplate - Parts

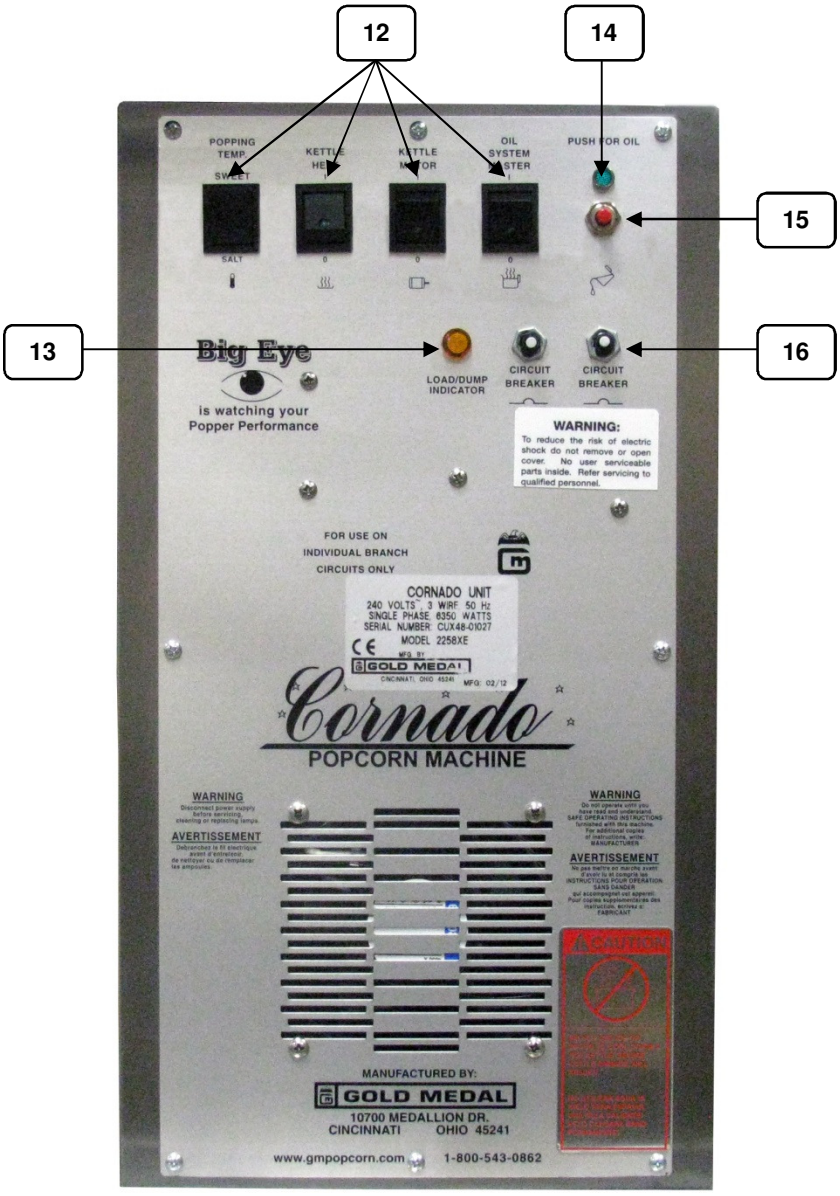

Heated Oil Line (60 oz. Only) – P/N 17895

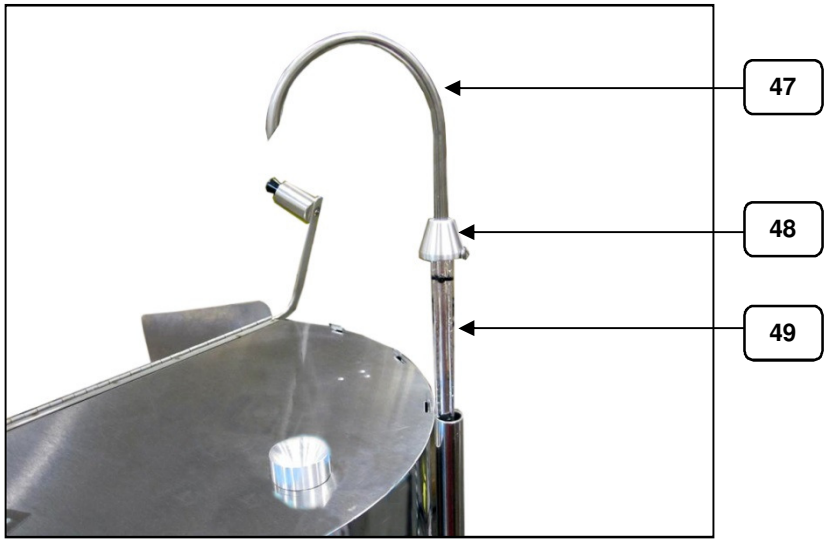

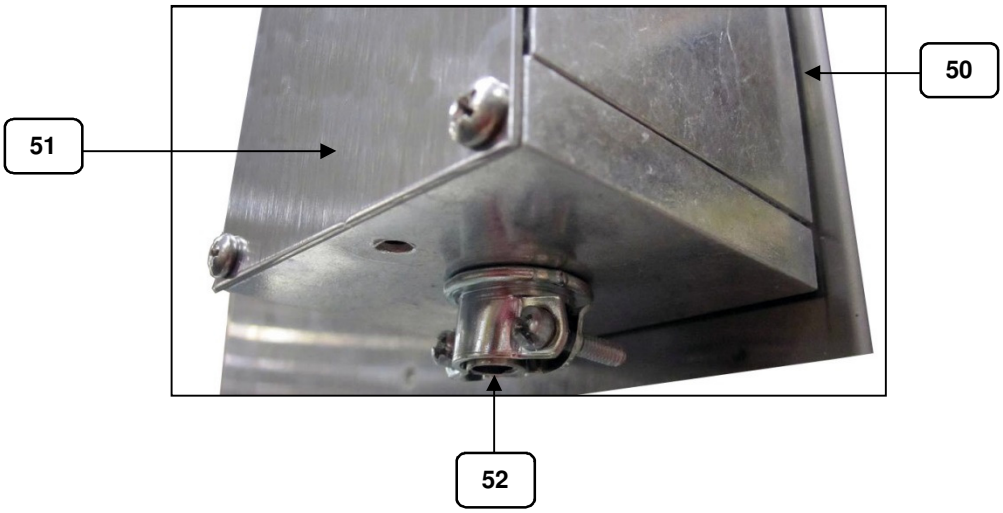

Inside Pedestal - Parts

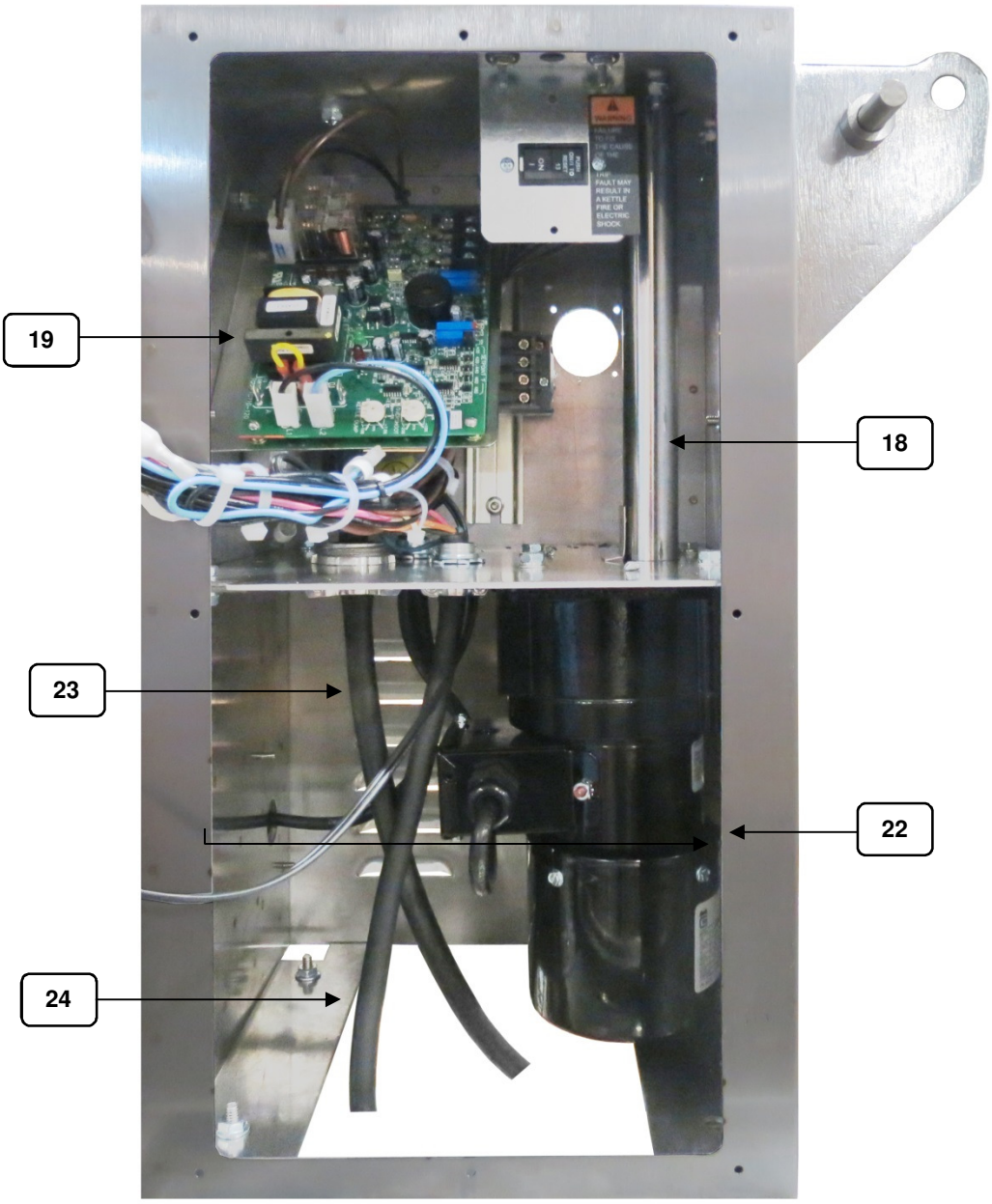

Inside Pedestal – Parts (Continued)

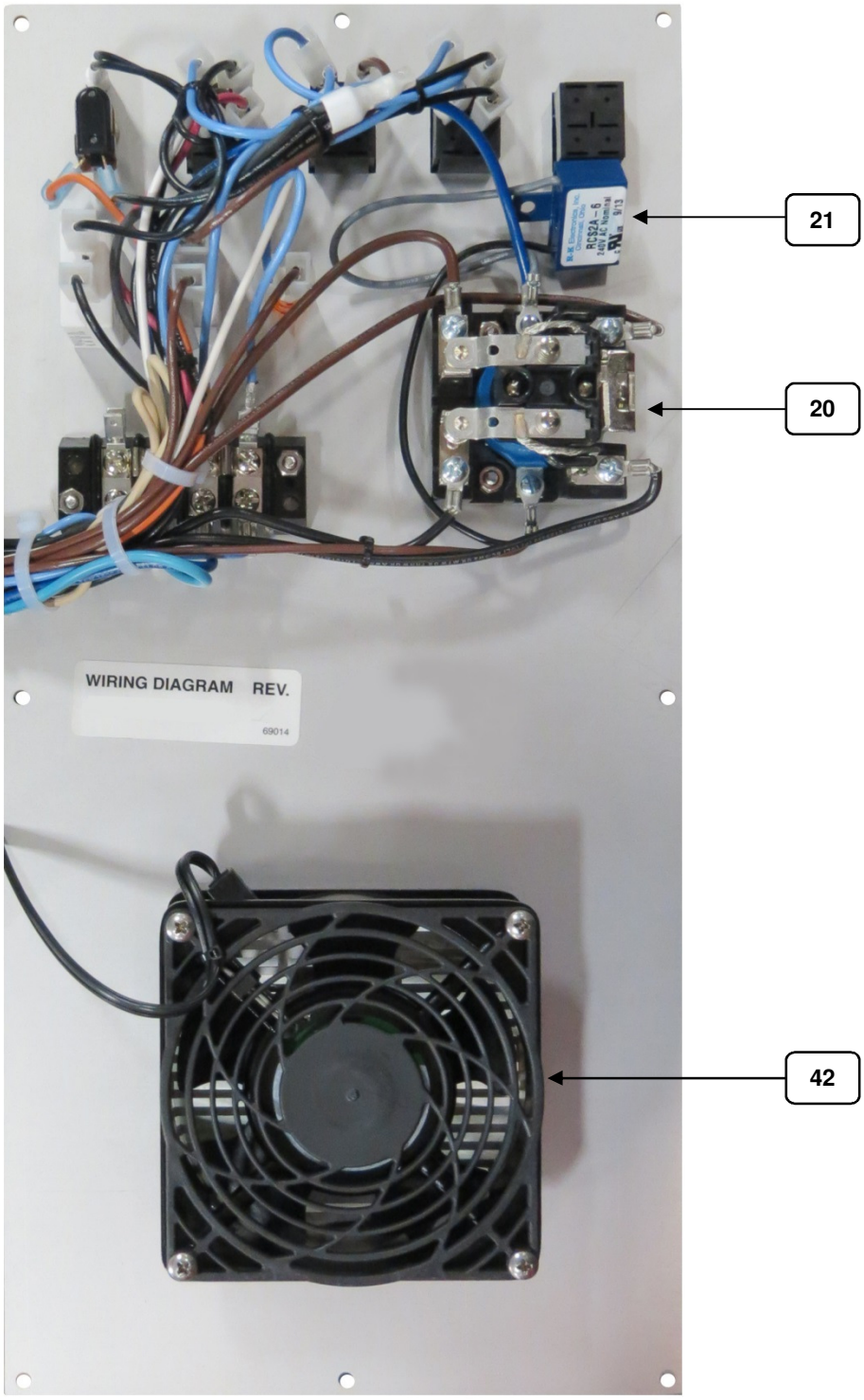

Kettle - Parts (36 oz.) Complete Assy. P/N 83287E

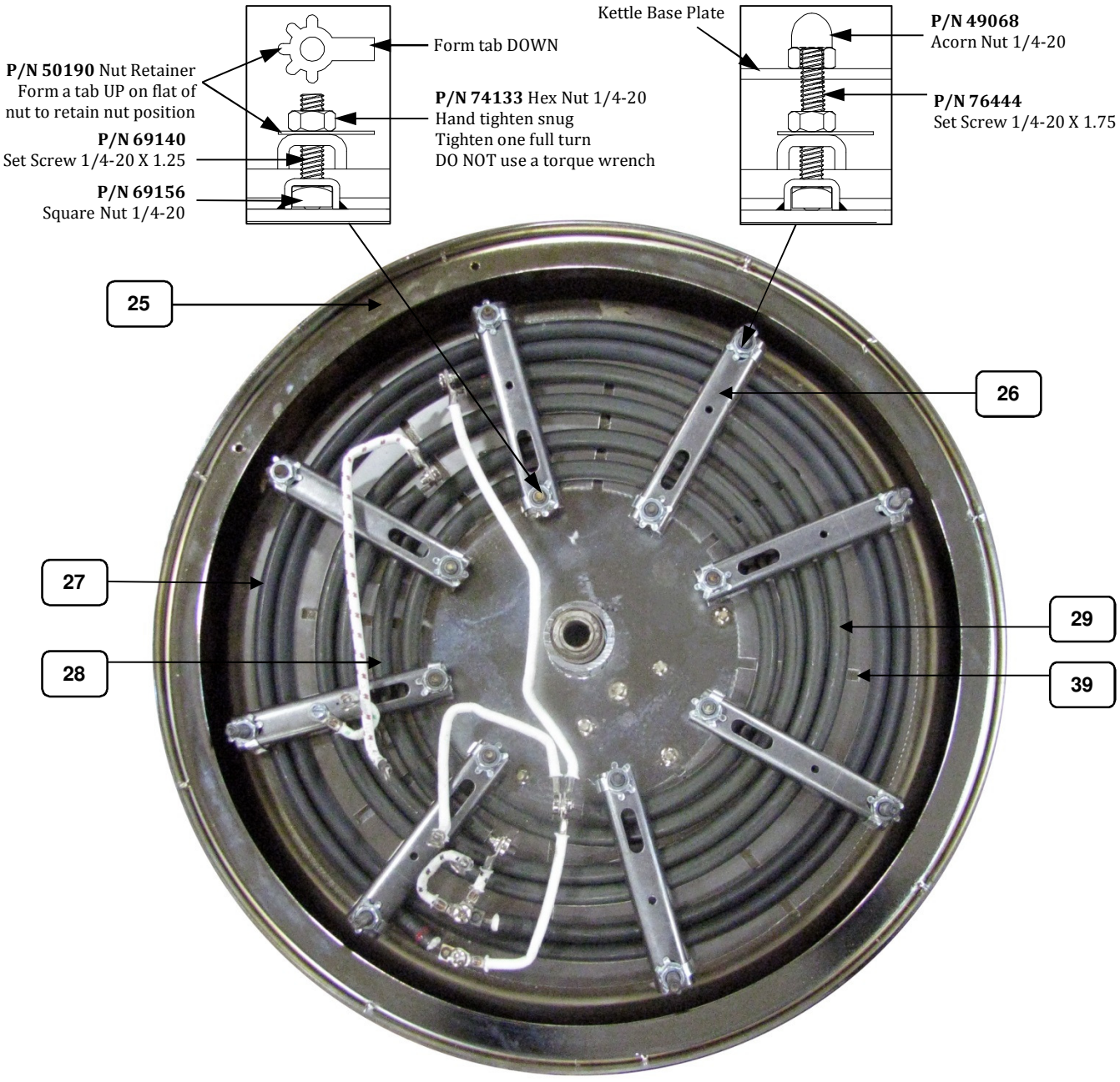

Kettle - Parts (48 oz.) Complete Assy. P/N 83288E

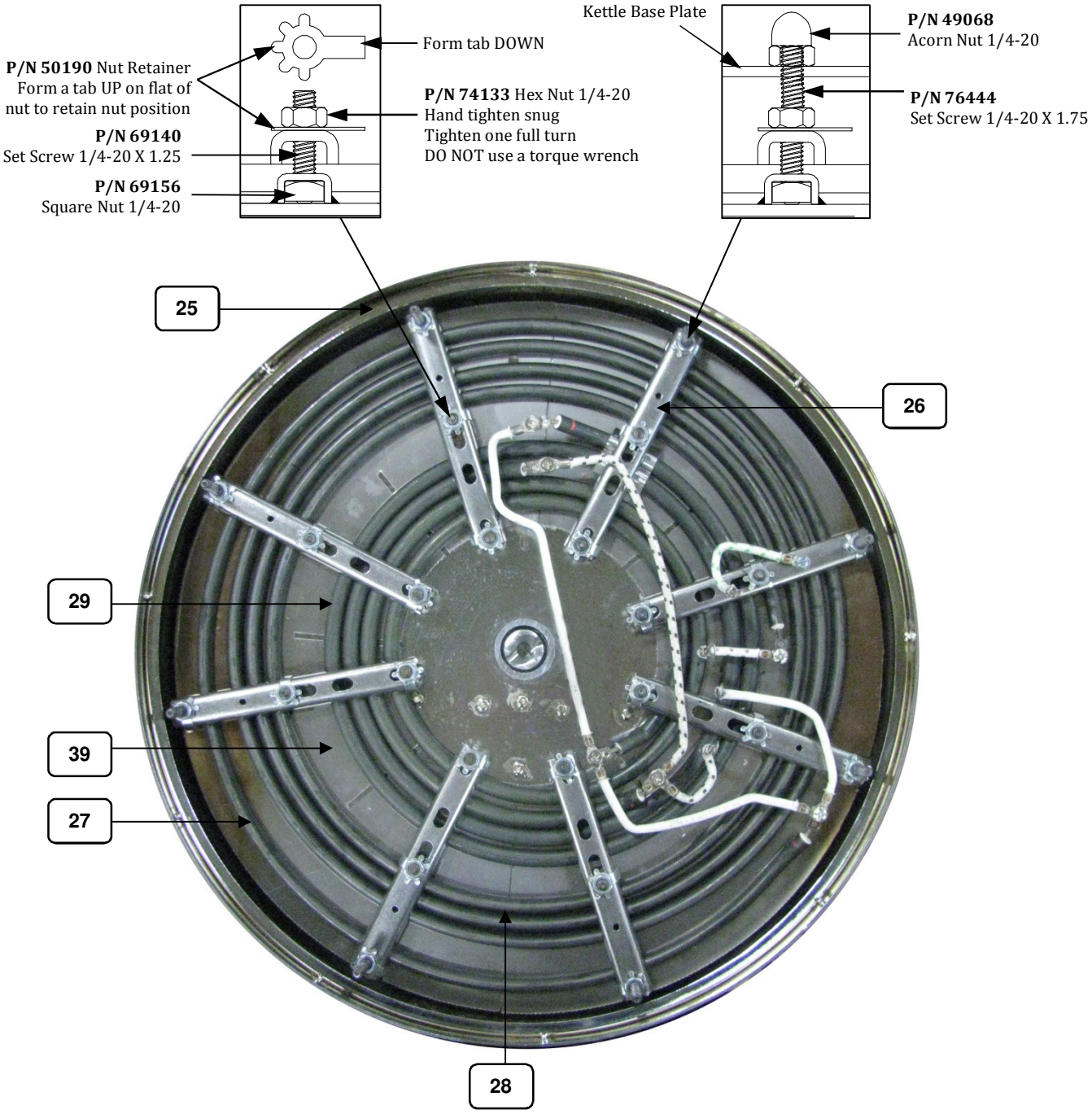

Kettle – Parts (60 oz.) Complete Assy. P/N 83319E

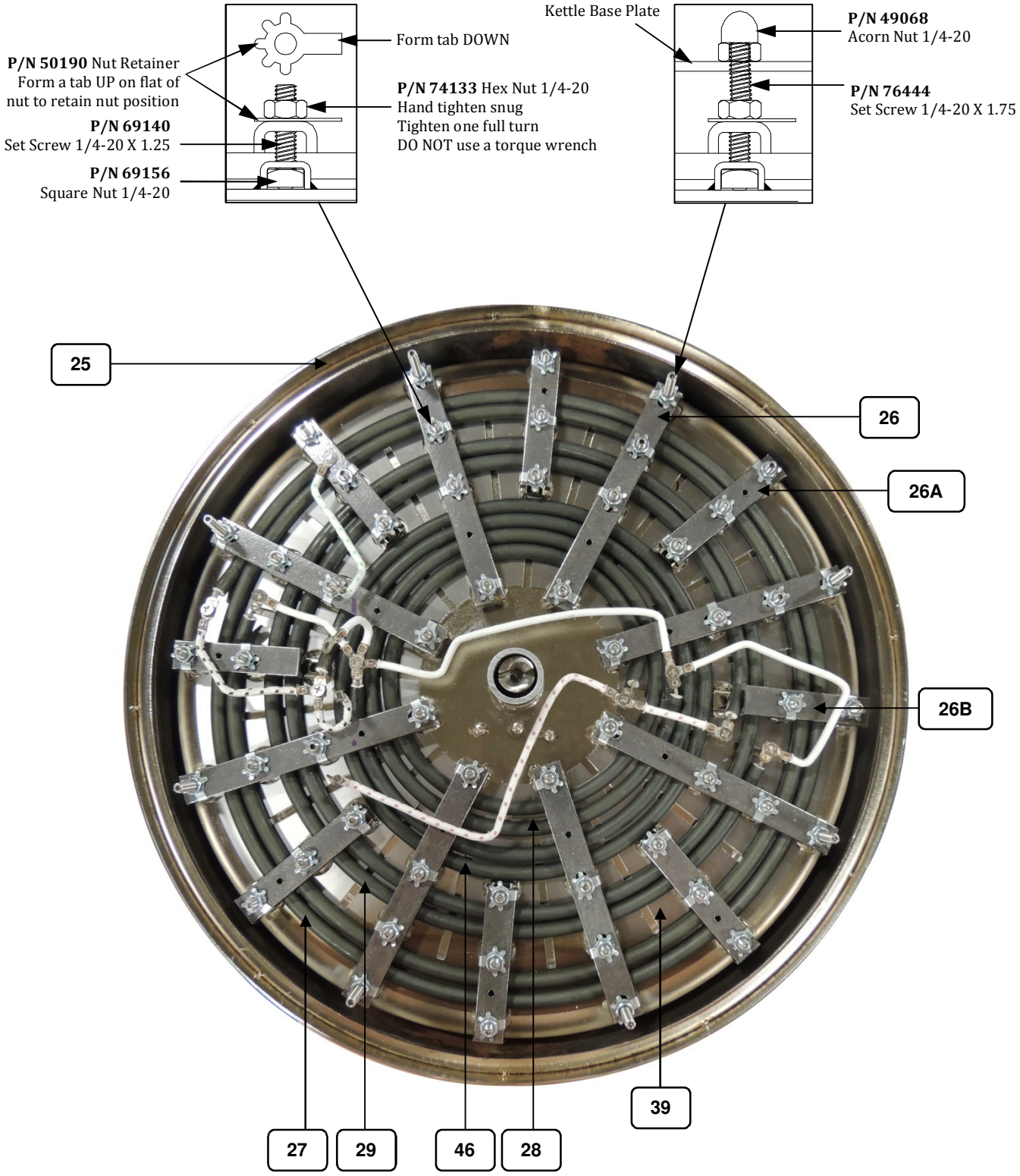

Kettle – Parts (Continued)

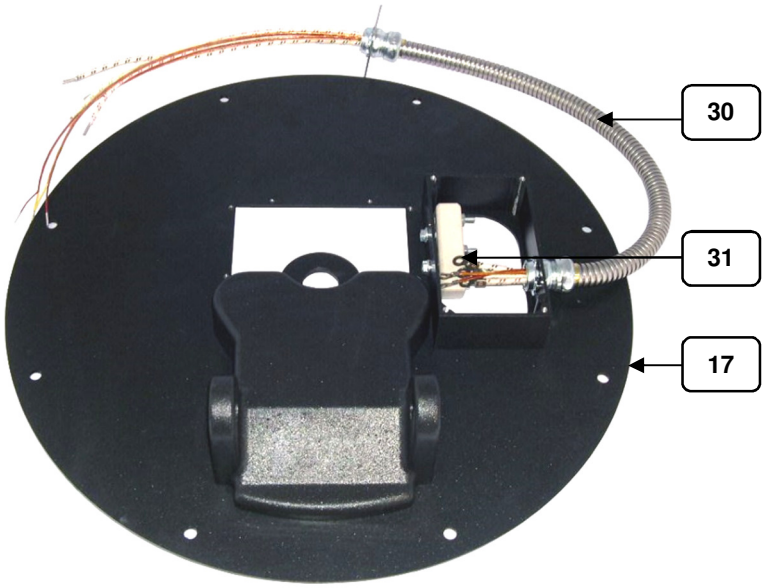

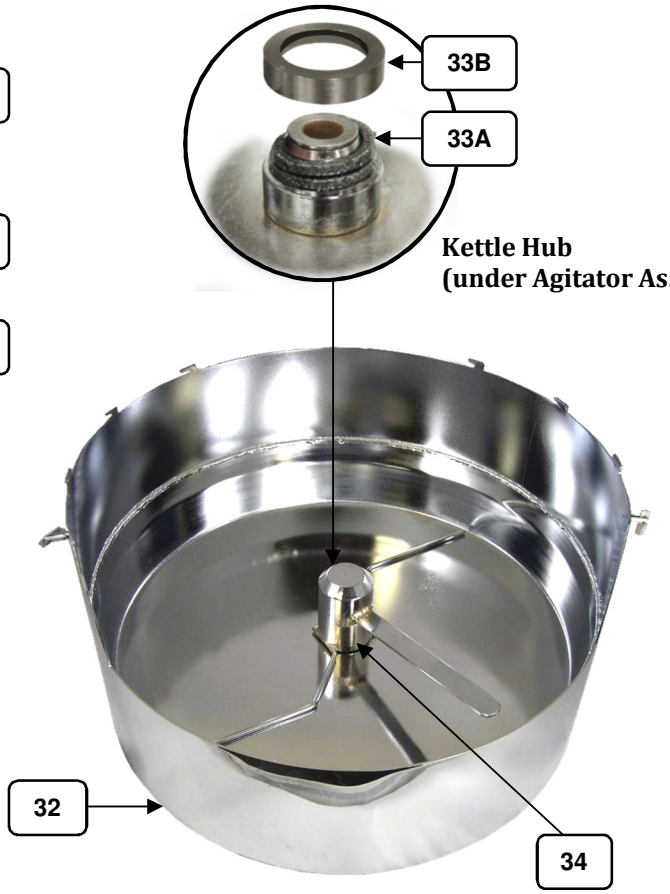

Kettle – Parts (Continued)

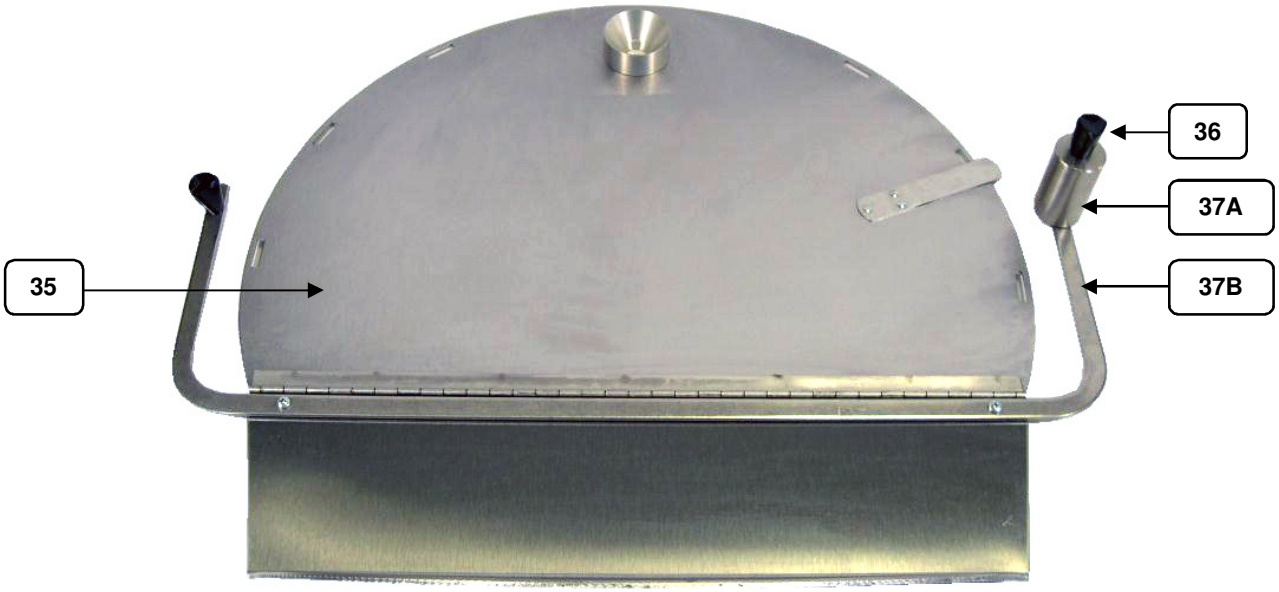

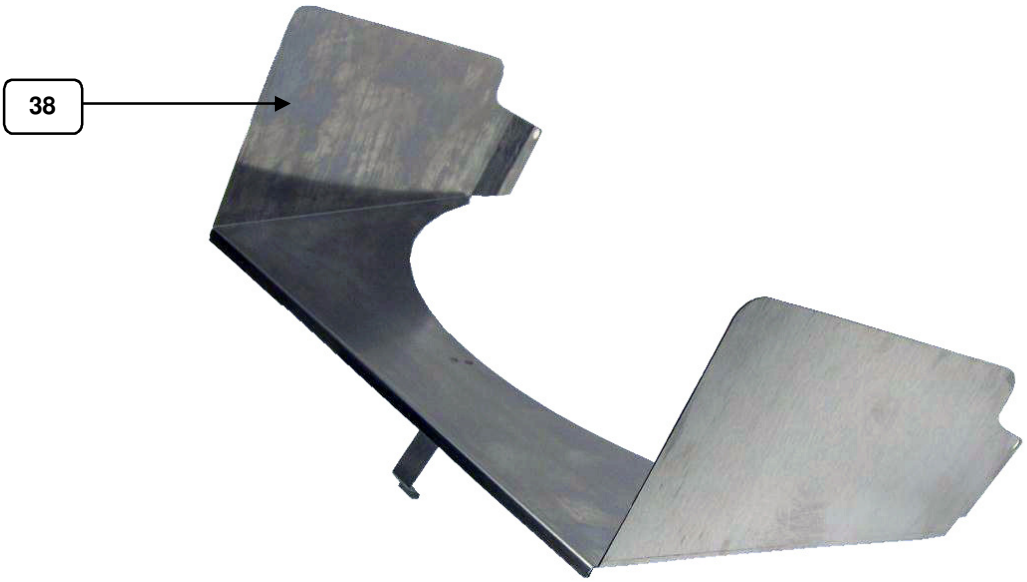

36 oz. Parts List

Item	Part Description	Part Number				
		2146E	2146EC	2146ES	2149E	2149EC
1	PLASTIC HANDLE	57028	57028	57028	57028	57028
2	KETTLE MOUNT BRACKET	82550	82550	82550	82550	82550
3	ADJUSTING PLATE	82099	82099	82099	82099	82099
4	LOWER AGITATOR DRIVE SHAFT ASSEMBLY	82496	82041	82496	82496	82041
5A	KETTLE REST BUMPER	83111	83111	83111	83111	83111
5B	KETTLE REST	83110	83110	83110	83110	83110
6	PEDESTAL WELD ASSEMBLY				62115	62102
	PEDESTAL WELD ASSEMBLY – LH	62116	62103	62116		
7	HEX JAM NUT	82137	82137	82137	82137	82137
8	AGITATOR SHAFT	83287	83287	83287	83287	83287
9	THERMOSTAT COVER	83267	83267	83267	83267	83267
10	JUNCTION BOX COVER	41296	41296	41296	41296	41296
11	PIVOT CASTING	83281	83281	83281	83281	83281
12	LIGHTED ROCKER SWITCH	42798	42798	42798	42798	42798
13	AMBER PILOT LIGHT	55039	55039	55039	55039	55039
14	GREEN PILOT LIGHT	48660	48660	48660	48660	48660
15	OIL PUMP SWITCH	41031	41031	41031	41031	41031
16	15 AMP CIRCUIT BREAKER	47364	47364	47364	47364	47364
17	KETTLE BASE PLATE	83258	83258	83258	83258	83258
18	SHAFT SHIELD	82541	82072	82541	82541	82072
19	TEMPRATURE CONTROL	41001	41001	41001	41001	41001
20	30 AMP 120 VOLT RELAY	55219	55219	55219	55219	55219
21	240 VOLT TRANSIENT FILTER	89087	89087	89087	89087	89087
22	KETTLE DRIVE MOTOR	82085B	82085B	82085B	82085B	82085B
23	POWER SUPPLY CORD	82209	82209	82209	82209	82209
24	OIL PUMP WIRE HARNESS	41499	41499	41499	41499	41499
25	KETTLE GASKET	83279	83279	83279	83279	83279
26	ELEMENT CLAMP	68778	68778	68778	68778	68778
27	120V / 1350W ELEMENT	82318	82318	82318	82318	82318
28	120V / 1250W ELEMENT	48801	48801	48801	48801	48801
29	120V / 1800W ELEMENT	48650	48650	48650	48650	48650
30	KETTLE LEAD ASSEMBLY	83552	83552	83552	83552	83552
31	TERMINAL BLOCK	41129	41129	41129	41129	41129
32	KETTLE WELDED ASSEMBLY	69552	69552	69552	69552	69552
33A	PACKING CORD	69304-7	69304-7	69304-7	69304-7	69304-7
33B	PACKING CAGE	69302	69302	69302	69302	69302
34	AGITATOR ASSEMBLY	83294	83294	83294	83294	83294
35	KETTLE LID	83044	83044	83044	83044	83044
36	LID LIFT KNOB	47120	47120	47120	47120	47120
37A	COUNTER WEIGHT	83114	83114	83114	83114	83114
37B	COUNTER WEIGHT BAR	82853	82853	82853	82853	82853
38	DUMP CHUTE	82636	82636	82636	82636	82636
39	HEAT TRANSFER PLATE	69337	69337	69337	69337	69337
40	TORSION SPRING	74660	74660	74660	74660	74660
41	DUMP HANDLE				82253	82253
	DUMP HANDLE – LH	82275	82275	82275		
42	EXHAUST BLOWER	48018	48018	48018	48018	48018
43	THRUST WASHER 1/32"	67852	67852	67852	67852	67852
44	SET COLLAR	47326	47326	47326	47326	47326
45	SET SCREW 5/16 – 18 X 15/8"	74662	74662	74662	74662	74662

.

48 oz. Parts List

Item	Part Description	Part Number				
		2258E	2258EC	2258EL	2258ELC	2258ES
1	PLASTIC HANDLE	57028	57028	57028	57028	57028
2	KETTLE MOUNT BRACKET	82550	82550	82550	82550	82550
3	ADJUSTING PLATE	82099	82099	82099	82099	82099
4	LOWER AGITATOR DRIVE SHAFT ASSEMBLY	82496	82496	82496	82496	82496
5A	KETTLE REST BUMPER	83111	83111	83111	83111	83111
5B	KETTLE REST	83110	83110	83110	83110	83110
6	PEDESTAL WELD ASSEMBLY	62115	62102			62115
	PEDESTAL WELD ASSEMBLY – LH			62116	62103	
7	HEX JAM NUT	82137	82137	82137	82137	82137
8	AGITATOR SHAFT	83287	83287	83287	83287	83287
9	THERMOSTAT COVER	83267	83267	83267	83267	83267
10	JUNCTION BOX COVER	41296	41296	41296	41296	41296
11	PIVOT CASTING	83281	83281	83281	83281	83281
12	LIGHTED ROCKER SWITCH	42798	42798	42798	42798	42798
13	AMBER PILOT LIGHT	55039	55039	55039	55039	55039
14	GREEN PILOT LIGHT	48660	48660	48660	48660	48660
15	OIL PUMP SWITCH	41031	41031	41031	41031	41031
16	15 AMP CIRCUIT BREAKER	47364	47364	47364	47364	47364
17	KETTLE BASE PLATE	83264	83264	83264	83264	83264
18	SHAFT SHIELD	82541	82541	82541	82541	82541
19	TEMPRATURE CONTROL	41001	41001	41001	41001	41001
20	30 AMP 120 VOLT RELAY	55219	55219	55219	55219	55219
21	240 VOLT TRANSIENT FILTER	89087	89087	89087	89087	89087
22	KETTLE DRIVE MOTOR	82085B	82085B	82085B	82085B	82085B
23	POWER SUPPLY CORD	82260	82260	82260	82260	82260
24	OIL PUMP WIRE HARNESS	41499	41499	41499	41499	41499
25	KETTLE GASKET	83280	83280	83280	83280	83280
26	ELEMENT CLAMP	68780	68780	68780	68780	68780
27	2700W ELEMENT	82597	82598	82598	82598	82598
28	1050W ELEMENT	48651	48651	48651	48651	48651
29	1500W ELEMENT	48800	48800	48800	48800	48800
30	KETTLE LEAD ASSEMBLY	55314	55314	55314	55314	55314
31	TERMINAL BLOCK	41129	41129	41129	41129	41129
32	KETTLE WELDED ASSEMBLY	69555	69555	69555	69555	69555
33A	PACKING CORD	69304-7	69304-7	69304-7	69304-7	69304-7
33B	PACKING CAGE	69302	69302	69302	69302	69302
34	AGITATOR ASSEMBLY	83293	83293	83293	83293	83293
35	KETTLE LID	83046	83046	83046	83046	83046
36	LID LIFT KNOB	47120	47120	47120	47120	47120
37A	COUNTER WEIGHT	83114	83114	83114	83114	83114
37B	COUNTER WEIGHT BAR	82854	82854	82854	82854	82854
38	DUMP CHUTE	82829	82829	82829	82829	82829
39	HEAT TRANSFER PLATE	69336	69336	69336	69336	69336
40	TORSION SPRING	74660	74660	74660	74660	74660
41	DUMP HANDLE	82275	82275			82275
	DUMP HANDLE – LH			82276	82276	
42	EXHAUST BLOWER	48018	48018	48018	48018	48018
43	THRUST WASHER 1/32"	67852	67852	67852	67852	67852
44	SET COLLAR	47326	47326	47326	47326	47326
45	SET SCREW 5/16 – 18 X 15/8"	74662	74662	74662	74662	74662

60 oz. Parts List

Item	Part Description	Part Number			
		2297E	2297EL	2297ES	2297ELS
1	PLASTIC HANDLE	57028	57028	57028	57028
2	KETTLE MOUNT BRACKET	82550	82550	82550	82550
3	ADJUSTING PLATE	82099	82099	82099	82099
4	LOWER SHAFT ASSEMBLY	82496	82496	82496	82496
5	KETTLE REST CRUTCH TIP	83110	83110	83110	83110
5B	KETTLE REST CRUTCH TIP	83111	83111	83111	83111
6	PEDESTAL WELD ASSEMBLY.	17666		17666	
	PEDESTAL WELD ASSEMBLY LH		17667		82498
7	HEX JAM NUT	82137	82137	82137	82137
8	AGITATOR SHAFT	82496	82496	82496	82496
9	THERMOSTAT COVER	83267	83267	83267	83267
10	JUNCTION BOX COVER	41296	41296	41296	41296
11	PIVOT CASTING	83281	83281	83281	83281
12	LIGHTED ROCKER SWITCH	42798	42798	42798	42798
13	AMBER PILOT LIGHT	55039	55039	55039	55039
14	GREEN PILOT LIGHT	48660	48660	48660	48660
15	OIL PUMP SWITCH	41031	41031	41031	41031
16	15 AMP CIRCUIT BREAKER	47364	47364	47364	47364
17	KETTLE BASE PLATE	83302	83302	83302	83302
18	SHAFT SHIELD	82541	82541	82541	82541
19	TEMPERATURE CONTROL	41001	41001	41001	41001
20	30 AMP 120V RELAY	55219	55219	55219	55219
21	240V TRANSIENT FILTER	89087	89087	89087	89087
22	KETTLE DRIVE MOTOR	82085B	82085B	82085B	82085B
23	POWER SUPPLY CORD W/PLUG	82260	82260	82260	82260
24	OIL PUMP WIRE HARNESS	41499	41499	41499	41499
25	60 OZ. KETTLE GASKET	83315	83315	83315	83315
26A	ELEMENT CLAMP	83317	83317	83317	83317
26B	ELEMENT CLAMP	83316	83316	83316	83316
26C	ELEMENT CLAMP	83349	83349	83349	83349
27	230V / 2300W TUBULAR ELEMENT	68052	68052	68052	68052
28	230V / 1050W TUBULAR ELEMENT	48651	48651	48651	48651
29	230V / 1850W TUBULAR ELEMENT	68051	68051	68051	68051
30	KETTLE LEAD ASSEMBLY	55314	55314	55314	55314
31	TERMINAL BLOCK	41129	41129	41129	41129
32	KETTLE WELDED ASSEMBLY	83301	83301	83301	83301
33A	PACKING CORD	69304-7	69304-7	69304-7	69304-7
33B	PACKING CAGE	69302	69302	69302	69302
34	AGITATOR ASSEMBLY	17668	17668	17668	17668

60 oz. Parts List (Continued)

Item	Part Description	Part Number			
		2297E	2297EL	2297ES	2297ELS
35	KETTLE LID	83320	83320	83320	83320
36	LID LIFT KNOB	47120	47120	47120	47120
37A	COUNTER WEIGHT	83114	83114	83114	83114
37B	COUNTER WEIGHT BAR	83305	83305	83305	83305
38	DUMP CHUTE	83304	83304	83304	83304
39	HEAT TRANSFER PLATE	68053	68053	68053	68053
40	TORSION SPRING	74660	74660	74660	74660
41	DUMP HANDLE	82253		82253	
	DUMP HANDLE – LH		82276		82276
42	EXHAUST BLOWER	48018	48018	48018	48018
43	THRUST WASHER 1/32	67852	67852	67852	67852
44	SET COLLAR	47326	47326	47326	47326
45	SET SCREW 5/16 - 18 X 1¼	74662	74662	74662	74662
46	500W HEAT ELEMENT	68106	68106	68106	68106
47	OIL DELIVERY TUBE	17889	17889	17889	17889
48	SPOUT SET COLLAR	17891	17891	17891	17891
49	16W FOIL HEAT ELEMENT	17898	17898	17898	17898
50	JUNCTION BOX GASKET	40963	40963	40963	40963
51	TOP LID	17899	17899	17899	17899
52	STRAIN RELIEF	76026	76026	76026	76026

Wiring Diagram

For wiring information, please reference
the Wiring Diagram shipped with the popper.

WARRANTY

Gold Medal Products Co. warrants to the original purchaser each item of its manufacture to be free of defects in workmanship and material under normal use and service. Gold Medal Products Co.'s obligation under this warranty is limited solely to repairing or replacing parts, f.o.b. Cincinnati, Ohio, which in its judgment are defective in workmanship or material and which are returned, freight prepaid, to its Cincinnati, Ohio factory or other designated point. Except for "Perishable Parts" on specific machines, the above warranty applies for a period of two (2) years from the date of original sale to the original purchaser of equipment when recommended operating instructions and maintenance procedures have been followed. These are packed with the machine. Parts warranty is two (2) years, labor is six (6) months.

THIS WARRANTY IS IN LIEU OF ALL OTHER WARRANTIES EXPRESSED OR IMPLIED, AND OF ALL OTHER OBLIGATIONS OR LIABILITIES ON OUR PART, INCLUDING THE IMPLIED WARRANTY OF MERCHANTABILITY. THERE ARE NO WARRANTIES WHICH EXTEND BEYOND THE DESCRIPTION ON THE FACE HEREOF. In no event shall Gold Medal Products Co. be liable for special, incidental or consequential damages. No claim under this warranty will be honored if the equipment covered has been misused, neglected, damaged in transit, or has been tampered with or changed in any way. No claim under this warranty shall be honored in the event that components in the unit at the time of the claim were not supplied or approved by Gold Medal Products Co. This warranty is effective only when electrical items have been properly attached to city utility lines only at proper voltages. This warranty is not transferable without the written consent of Gold Medal Products Co.

The term "Original Purchaser" as used in this warranty shall be deemed to mean that person, firm, association, or corporation who was billed by the GOLD MEDAL PRODUCTS CO., or their authorized distributor for the equipment.

THIS WARRANTY HAS NO EFFECT AND IS VOID UNLESS THE ORIGINAL PURCHASER FIRST CALLS GOLD MEDAL PRODUCTS CO. AT 1-800-543-0862 TO DISCUSS WITH OUR SERVICE REPRESENTATIVE THE EQUIPMENT PROBLEM, AND, IF NECESSARY, FOR INSTRUCTIONS CONCERNING THE REPAIR OR REPLACEMENT OF PARTS.

NOTE: This equipment is manufactured and sold for commercial use only.

GOLD MEDAL® PRODUCTS CO.
10700 Medallion Drive, Cincinnati, Ohio 45241-4807 USA
gmpopcorn.com
Phone: (800) 543-0862 (513) 769-7676 Fax: (800) 542-1496 (513) 769-8500

© 2014 – The text, descriptions, graphics, layout, and other material in this publication are the exclusive property of Gold Medal Products Co. and shall not be used, copied, reproduced, or published in any fashion, including website display, without its express written consent.