JOB:
ITEM:
QTY:

Made in the USA

ALL WELDED SHELVING - T-BAR SERIES

APPLICATION:

These units are designed for heavy loads. These units make it easier to organize larger, heavier loads. Mobile units are available.

MATERIAL:

Framework is constructed of 1 1/2”x1 1/2”x.070” wall tubing. Laterals on the shelves are constructed out of 1 1/4”x2 1/4”x.100” wall T-Bar. Stationary units come equipped with adjustable feet.

CASTERS:

The mobile units have an option of coming equipped with four 5” platform type casters or four 6” platform type casters.

GUARANTEE:

These shelving units carry a **Lifetime Guarantee** against rust and corrosion and also carry a **Lifetime Guarantee** against workmanship and material defects.



All Welded Shelving - T-Bar Series



All Welded Shelving- T-Bar Series Mobile

Phone:800-255-0104
Fax: 877-877-7687
www.newageindustrial.com
sales@newageindustrial.com

New Age Industrial reserves the right to modify or make changes at any time without notice to materials and specifications.

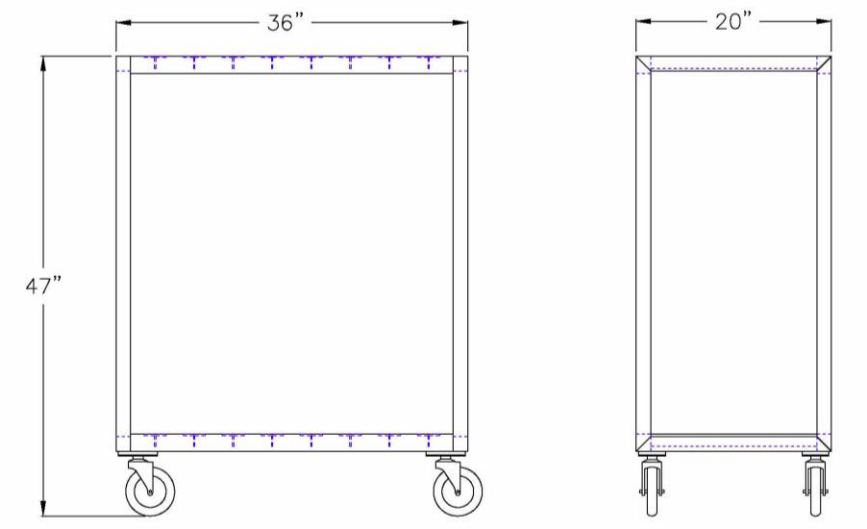

Model #1021TBM5

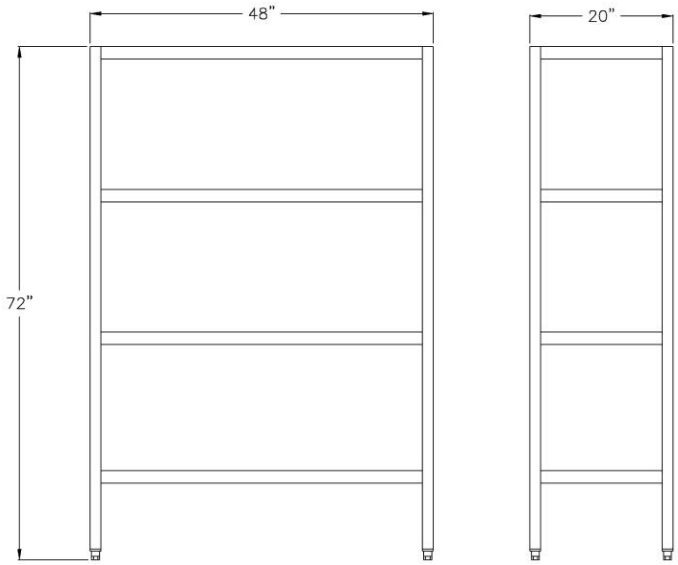

Model #1062TB

Model No.	Size-W	Size-H	Size-D
Two Shelf Unit			
1021TB	20"	48"	36"
1030TB	20"	48"	42"
1022TB	20"	48"	48"
1023TB	20"	48"	60"
1024TB	20"	48"	72"
1025TB	24"	48"	36"
1031TB	24"	48"	42"
1026TB	24"	48"	48"
1027TB	24"	48"	60"
1028TB	24"	48"	72"
Three Shelf Unit			
1041TB	20"	60"	36"
1050TB	20"	60"	42"
1042TB	20"	60"	48"
1043TB	20"	60"	60"
1044TB	20"	60"	72"
1045TB	24"	60"	36"
1051TB	24"	60"	42"
1046TB	24"	60"	48"
1047TB	24"	60"	60"
1048TB	24"	60"	72"
Four Shelf Unit			
1061TB	20"	72"	36"
1070TB	20"	72"	42"
1062TB	20"	72"	48"
1063TB	20"	72"	60"
1064TB	20"	72"	72"
1065TB	24"	72"	36"
1071TB	24"	72"	42"
1066TB	24"	72"	48"
1067TB	24"	72"	60"
1068TB	24"	72"	72"

Options- Add “M6” suffix to model # for 6” Casters. (3000# Cap.)

Add “M5” suffix to model # for 5” casters. (1200# Cap.)

Phone:800-255-0104
Fax: 877-877-7687
www.newageindustrial.com
sales@newageindustrial.com

New Age Industrial reserves the right to modify or make changes at any time without notice to materials and specifications.