JOB:
ITEM:
QTY:

Made in the USA

ALL WELDED SHELVING - H.D. SERIES

APPLICATION:

These units are designed for heavy loads. These units make it easier to organize larger, heavier loads. Mobile units are available.

MATERIAL:

These solid all welded units are constructed out of 1 1/2”x1 1/2”x.070” wall tubing.

CASTERS:

The mobile units have an option of coming equipped with four 5” platform type casters or four 6” platform type casters.

GUARANTEE:

These shelving units carry a **Lifetime Guarantee** against rust and corrosion and also carry a **Lifetime Guarantee** against workmanship and material defects.



Mobile- All Welded Unit



Stationary- All Welded Unit

Phone:800-255-0104
Fax: 877-877-7687
www.newageindustrial.com
sales@newageindustrial.com

New Age Industrial reserves the right to modify or make changes at any time without notice to materials and specifications.

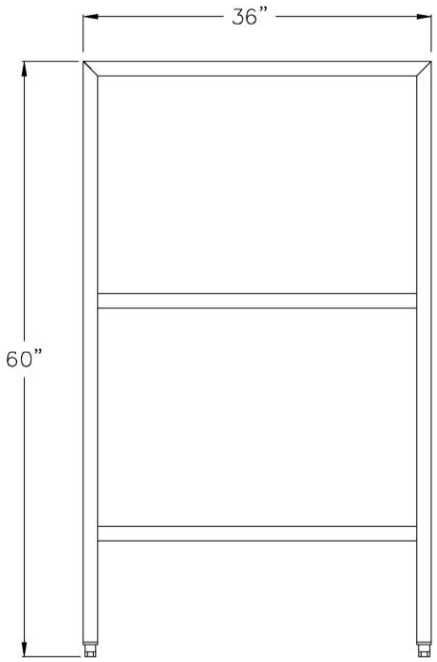

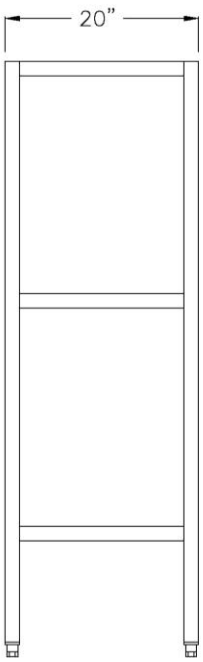

Model #1041

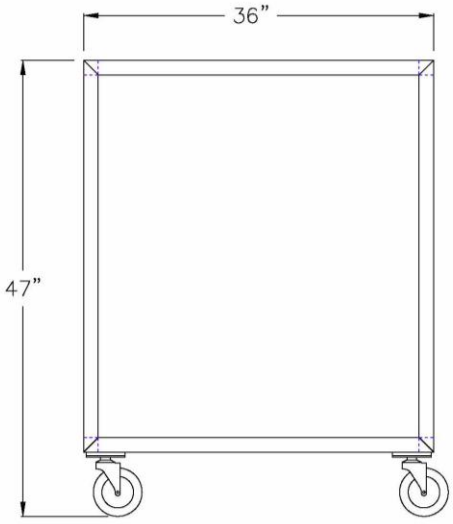

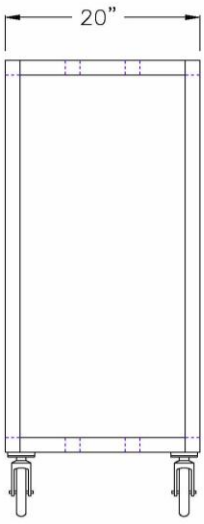

Model #1021M5

Model No.	Size-W	Size-H	Size-D	No. of Lat.
Two Shelf Unit				
1021	20"	48"	36"	4
1030	20"	48"	42"	4
1022	20"	48"	48"	4
1023	20"	48"	60"	4
1024	20"	48"	72"	4
1025	24"	48"	36"	5
1031	24"	48"	42"	5
1026	24"	48"	48"	5
1027	24"	48"	60"	5
1028	24"	48"	72"	5
Three Shelf Unit				
1041	20"	60"	36"	4
1050	20"	60"	42"	4
1042	20"	60"	48"	4
1043	20"	60"	60"	4
1044	20"	60"	72"	4
1045	24"	60"	36"	5
1051	24"	60"	42"	5
1046	24"	60"	48"	5
1047	24"	60"	60"	5
1048	24"	60"	72"	5
Four Shelf Unit				
1061	20"	72"	36"	4
1070	20"	72"	42"	4
1062	20"	72"	48"	4
1063	20"	72"	60"	4
1064	20"	72"	72"	4
1065	24"	72"	36"	5
1071	24"	72"	42"	5
1066	24"	72"	48"	5
1067	24"	72"	60"	5
1068	24"	72"	72"	5

Options- Add “M6” suffix to model # for 6” Casters (3000# Capacity)

Add “M5” suffix to model # for 5” Casters (1500# Capacity)

Phone:800-255-0104
Fax: 877-877-7687
www.newageindustrial.com
sales@newageindustrial.com

New Age Industrial reserves the right to modify or make changes at any time without notice to materials and specifications.