JOB:
ITEM:
QTY:

Made in the USA

MOBILE DUNNAGE RACKS

APPLICATION:

These racks allow you to transport and store merchandise without having to load or unload it. Each unit has an option for a handle for even easier transporting.

MATERIAL:

Framework is constructed out of 1 1/2”x2 3/4” x.070 wall tubing. Laterals are constructed out of 1 1/2”x 1 3/4”x.070” wall tubing.

CASTERS:

These racks come equipped with four 5” platform type casters, two swivel with brake and two rigid.

GUARANTEE:

These racks carry a **Lifetime Guarantee** against rust and corrosion and also carry a **Five-Year Guarantee** against workmanship and material defects.



Model #1203 Shown W/ Optional Handle

NSF

Phone:800-255-0104
Fax: 877-877-7687
www.newageindustrial.com
sales@newageindustrial.com

New Age Industrial reserves the right to modify or make changes at any time without notice to materials and specifications.

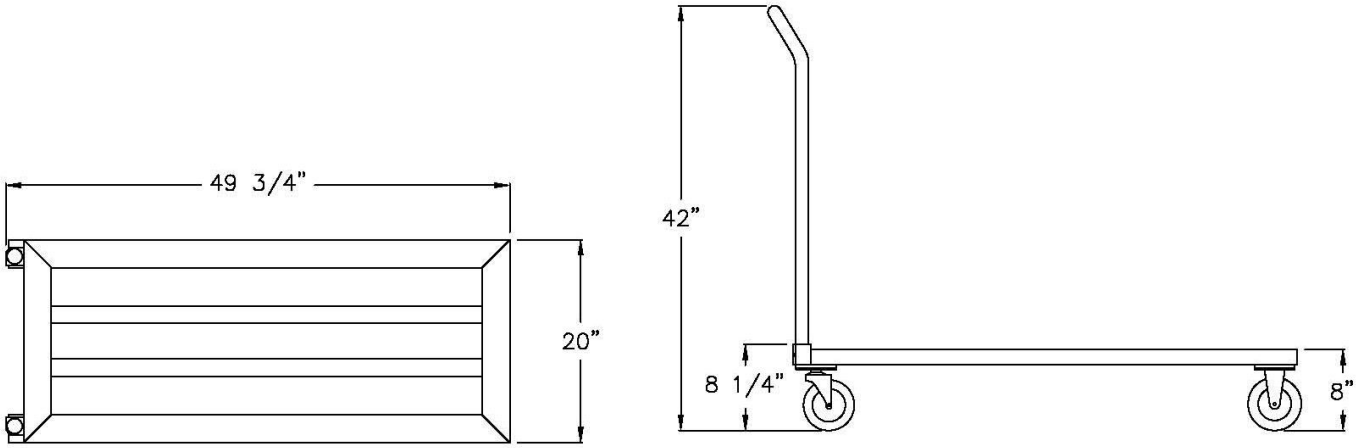

Model #1203

Model No.	Size-W	Size-H	Size-D	Wt. Cap.	Deck Size
1201	20"	8 1/4"	25 3/4"	1200#	20"x24"
1211	20"	8 1/4"	31 3/4"	1200#	20"x30"
1202	20"	8 1/4"	37 3/4"	1200#	20"x36"
1200	20"	8 1/4"	43 3/4"	1200#	20"x42"
1203	20"	8 1/4"	49 3/4"	1200#	20"x48"
1212	20"	8 1/4"	61 3/4"	1200#	20"x60"
1208	Handle for 20" W Units- Overall Height W/ Handle = 42”				
1213	24"	8 1/4"	25 3/4"	1200#	24"x24"
1214	24"	8 1/4"	31 3/4"	1200#	24"x30"
1204	24"	8 1/4"	37 3/4"	1200#	24"x36"
1205	24"	8 1/4"	43 3/4"	1200#	24"x42"
1206	24"	8 1/4"	49 3/4"	1200#	24"x48"
1207	24"	8 1/4"	61 3/4"	1200#	24"x60"
1174	Handle for 24" W Units-Overall Height W/ Handle = 42”				

NSF®

NEW AGE INDUSTRIAL

NEW AGE INDUSTRIAL NAI ALUMINUM SOLUTIONS

Phone:800-255-0104
Fax: 877-877-7687
www.newageindustrial.com
sales@newageindustrial.com

New Age Industrial reserves the right to modify or make changes at any time without notice to materials and specifications.