JOB:
ITEM:
QTY:

EQUIPMENT STAND

Specifically Designed To Accommodate Counter-Top Cooking & Warming Equipment.

This all purpose stand is perfect for counter-top cooking as well as holding or serving equipment. *Removable* heavy-duty 12-gauge aluminum top and optional under shelf lift off for easy cleaning and are fully supported by the all welded, heavy-duty frame. Marine edge provides easy cleaning and equipment stability. Adjustable posts allow for quick stabilization and easy leveling on stationary units while 5” stem type casters provide smooth transportation for mobile units.



EQUIPMENT STAND SHOWN WITH OPTIONAL UNDERSHELF AND CASTERS

Guaranteed

Like all of our products, the equipment stand is built to last… We Guarantee It! Each unit carries a ***Lifetime Guarantee*** against rust and corrosion as well as a ***Five-Year Guarantee*** against material defects and workmanship.

Phone:800-255-0104
Fax: 877-877-7687
www.newageindustrial.com
sales@newageindustrial.com

New Age Industrial reserves the right to modify or make changes at any time without notice to materials and specifications.

SPECIFICATIONS

TOP: 12 gauge aluminum sheet, with 4 one inch lips down and marine edge around perimeter of top, supported by 5 (30" deep) or 4 (24" deep) 1-½" x 1-½" x 13 gauge wall reinforcing bars. Aluminum collars are permanently welded in place to accommodate the uprights with a stainless steel set screw to lock the upright in place.

UPRIGHTS: Consists of extruded aluminum OD. pipe of 1-5/16 and a wall thickness of .150". with plastic end caps on each end.

OPTIONAL CASTERS: Four 5" stem type heavy-duty swivel casters (#C440) with non-marking wheel.

OPTIONAL UNDERSHELF: 12 gauge aluminum sheet.

OPTION: Add "SR" suffix to model # for sandwich rail.

WEIGHT CAPACITY: 1000#

All units shipped knocked down.

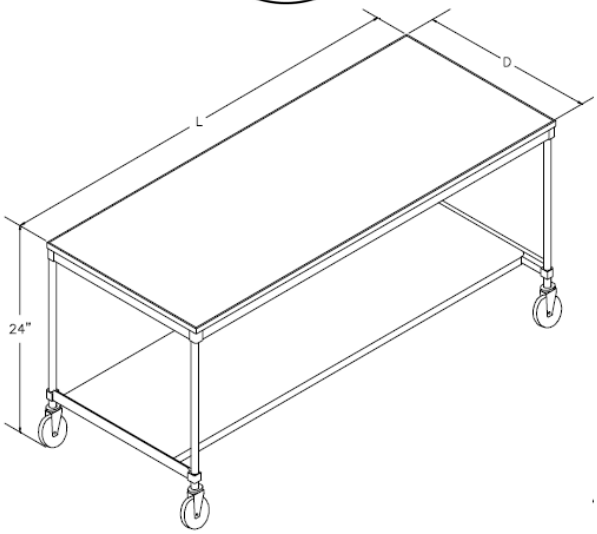

Model No.	Size-D	Size-H	Size-L
STATIONARY UNITS			
12436GS	24"	24"	36"
12448GS	24"	24"	48"
12460GS	24"	24"	60"
12472GS	24"	24"	72"
13036GS	30"	24"	36"
13048GS	30"	24"	48"
13060GS	30"	24"	60"
13072GS	30"	24"	72"
STATIONARY UNIT W/ UNDERSHELF			
12436GSU	24"	24"	36"
12448GSU	24"	24"	48"
12460GSU	24"	24"	60"
12472GSU	24"	24"	72"
13036GSU	30"	24"	36"
13048GSU	30"	24"	48"
13060GSU	30"	24"	60"
13072GSU	30"	24"	72"
MOBILE UNIT			
12436GSC	24"	24"	36"
12448GSC	24"	24"	48"
12460GSC	24"	24"	60"
12472GSC	24"	24"	72"
13036GSC	30"	24"	36"
13048GSC	30"	24"	48"
13060GSC	30"	24"	60"
13072GSC	30"	24"	72"
MOBILE UNIT W/ UNDERSHELF			
12436GSCU	24"	24"	36"
12448GSCU	24"	24"	48"
12460GSCU	24"	24"	60"
12472GSCU	24"	24"	72"
13036GSCU	30"	24"	36"
13048GSCU	30"	24"	48"
13060GSCU	30"	24"	60"
13072GSCU	30"	24"	72"

Phone:800-255-0104
Fax: 877-877-7687
www.newageindustrial.com
sales@newageindustrial.com

New Age Industrial reserves the right to modify or make changes at any time without notice to materials and specifications.