JOB:
ITEM:
QTY:

Made in the USA

UNIVERSAL CART – RAC LINE

APPLICATION:
This cart is ideal for transporting various sized platters, trays, boxes, and lugs. Oval tubing shelves provide easy product access and selection.

MATERIAL:
Framework is constructed out of 1”x1”x.070” wall tubing. Shelves are constructed out of 1/2”x 1 1/4” oval tubing.

CASTERS:
This cart comes equipped with four 5” stem type swivel casters.

GUARANTEE:
This cart carries a **Lifetime Guarantee** against rust and corrosion and also carries a **One-Year Guarantee** against workmanship and material defects.



Model #1356M

NSF

Phone:800-255-0104
Fax: 877-877-7687
www.newageindustrial.com
sales@newageindustrial.com

New Age Industrial reserves the right to modify or make changes at any time without notice to materials and specifications.

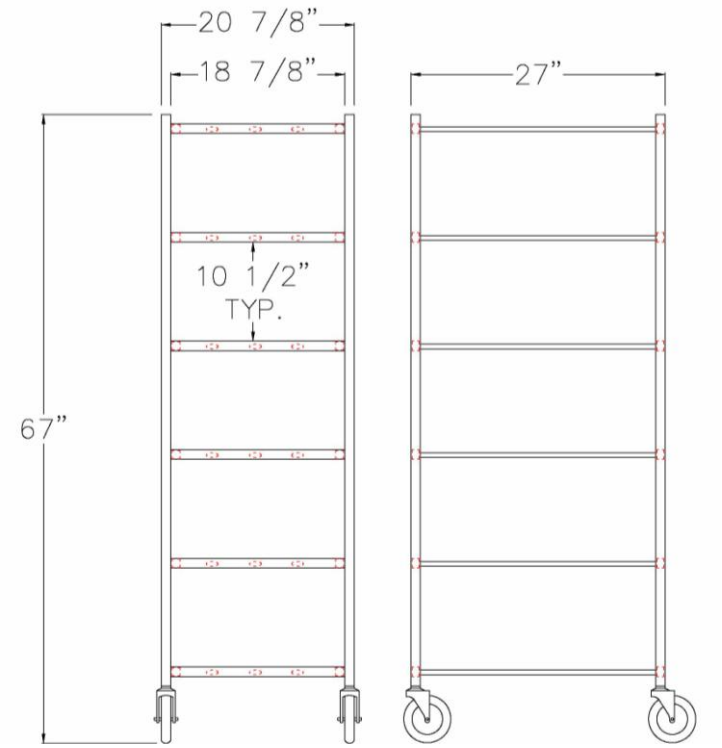

Model #1356M

Model No.	Size-W	Size-H	Size-D	Pan Cap.	Shelf Spacing
1356M	20 7/8"	67"	27"	6	10 1/2"

Phone:800-255-0104
Fax: 877-877-7687
www.newageindustrial.com
sales@newageindustrial.com

New Age Industrial reserves the right to modify or make changes at any time without notice to materials and specifications.