JOB:
ITEM:
QTY:

Made in the USA

POLY TOP TABLES

APPLICATION:

These tables are ideal for food preparation with removable 5/8" thick HDPE top. All models have an optional aluminum under shelf.

MATERIAL:

Framework is constructed out of 1 1/2"x
1 1/2"x.070" wall tubing. Front and back of the top has 1 1/2"x3 1/8"x070" wall tubing. Table legs are constructed out of 1 5/8" diameter pipe. Tabletops are constructed out of 5/8" thick HDPE. Each table comes equipped with a mounting bracket for boat racks. All tables come equipped with four NSF certified adjustable feet.

GUARANTEE:

These tables carry a **Lifetime Guarantee** against rust and corrosion and also carry a **Five-Year Guarantee** against workmanship and material defects.



Poly Top Table with Backsplash

Phone:800-255-0104
Fax: 877-877-7687
www.newageindustrial.com
sales@newageindustrial.com

New Age Industrial reserves the right to modify or make changes at any time without notice to materials and specifications.

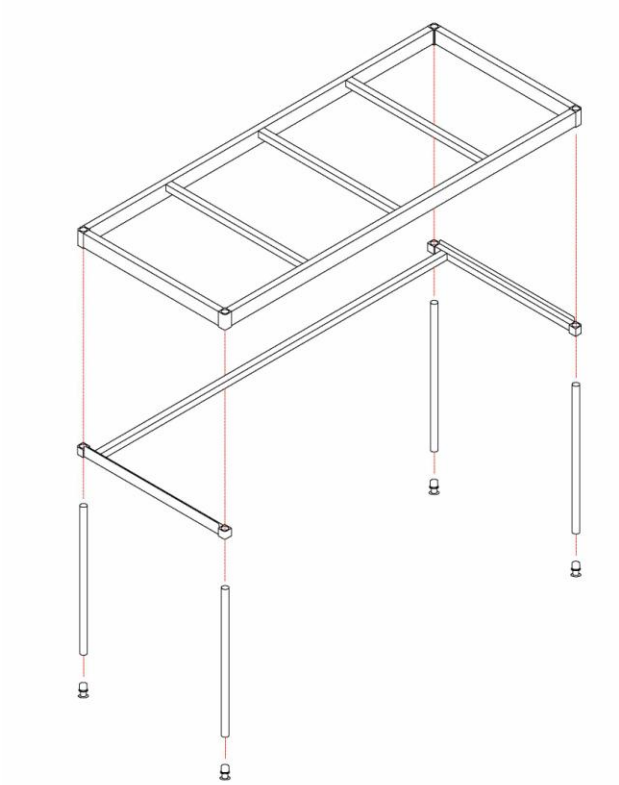

Knock Down Table Frame

Model No.	Size-D	Size-H	Size-L
Poly Top With 6" Backsplash			
95562KD	30”	34"	84”

Phone:800-255-0104
Fax: 877-877-7687
www.newageindustrial.com
sales@newageindustrial.com

New Age Industrial reserves the right to modify or make changes at any time without notice to materials and specifications.