JOB:
ITEM:
QTY:

Made in the USA

WIDE-ANGLE ROLL-IN RACK
STEPPED-ANGLE ROLL-IN RACK

APPLICATION:
These racks are built specifically for roll-in freezers, proofers, refrigerators, and retarders. Heavy-duty construction is built for the long haul. Angle runners are NOT ADJUSTABLE.

MATERIAL:
Uprights are constructed out of 1 1/2”x1 3/4” .070” wall D-Tube. Angle runners are 1 1/2”x 3 1/4”x .100” wall on the wide-angle racks and angle runners are 2”x6 3/16”x.100” wall on the stepped angle racks.

CASTERS:
These racks come equipped with four 5” platform type swivel casters.

GUARANTEE:
These racks carry a **Lifetime Guarantee** against rust and corrosion and also carry a **Lifetime Guarantee** against workmanship and material defects.



Model #4640

NSF

Phone:800-255-0104
Fax: 877-877-7687
www.newageindustrial.com
sales@newageindustrial.com

New Age Industrial reserves the right to modify or make changes at any time without notice to materials and specifications.

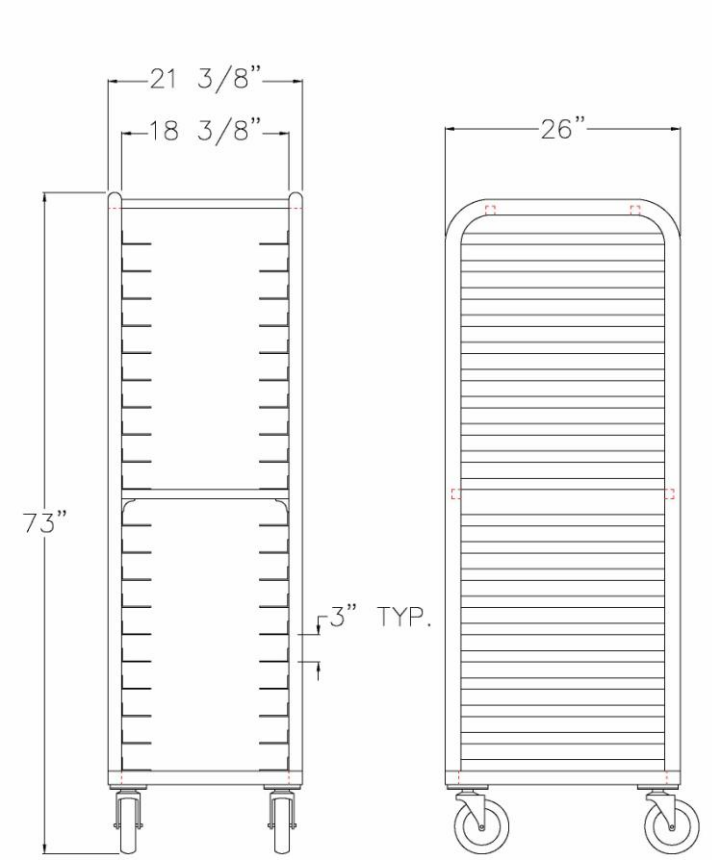

Model #4339

Model No.	Size-W	Size-H	Size-D	Runner Spacing
Wide-Angle Pan Racks				
4339	21 3/8"	73"	26"	3"
4340	21 3/8"	73"	26"	5"
Stepped-Angle Pan Racks				
4640	25"	73"	26"	4 1/2"
4642	25"	73"	26"	3"

LIFETIME SERIES
NEW AGE INDUSTRIAL

NSF®

NEW AGE INDUSTRIAL
NAI
ALUMINUM SOLUTIONS

Phone:800-255-0104
Fax: 877-877-7687
www.newageindustrial.com
sales@newageindustrial.com

New Age Industrial reserves the right to modify or make changes at any time without notice to materials and specifications.