JOB:
ITEM:
QTY:

Made in the USA

TRANPORT/RETRIEVAL RACK

APPLICATION:

These racks are specifically designed to transport and retrieve a large number of trays. These racks are also designed to hold a different variety of trays.

MATERIAL:

Framework on the single racks is constructed out of 1”x1”x.070” wall tubing. Framework on the doublewide rack is constructed out of 1 1/4”x1 1/2”x.070” wall tubing and 1 1/2”x1 1/2”x.070” wall tubing. Angle on the single units are 1 1/4”x1 5/8”x.100” wall and angle on the doublewide units are 1 7/16”x2 1/2” channel slide.

CASTERS:

These racks come equipped with four 5” platform type swivel casters, two with brake.

GUARANTEE:

These racks carry a **Lifetime Guarantee** against rust and corrosion and also carry a **Five-Year Guarantee** against workmanship and material defects.



Model #97744

NSF

Phone:800-255-0104
Fax: 877-877-7687
www.newageindustrial.com
sales@newageindustrial.com

New Age Industrial reserves the right to modify or make changes at any time without notice to materials and specifications.

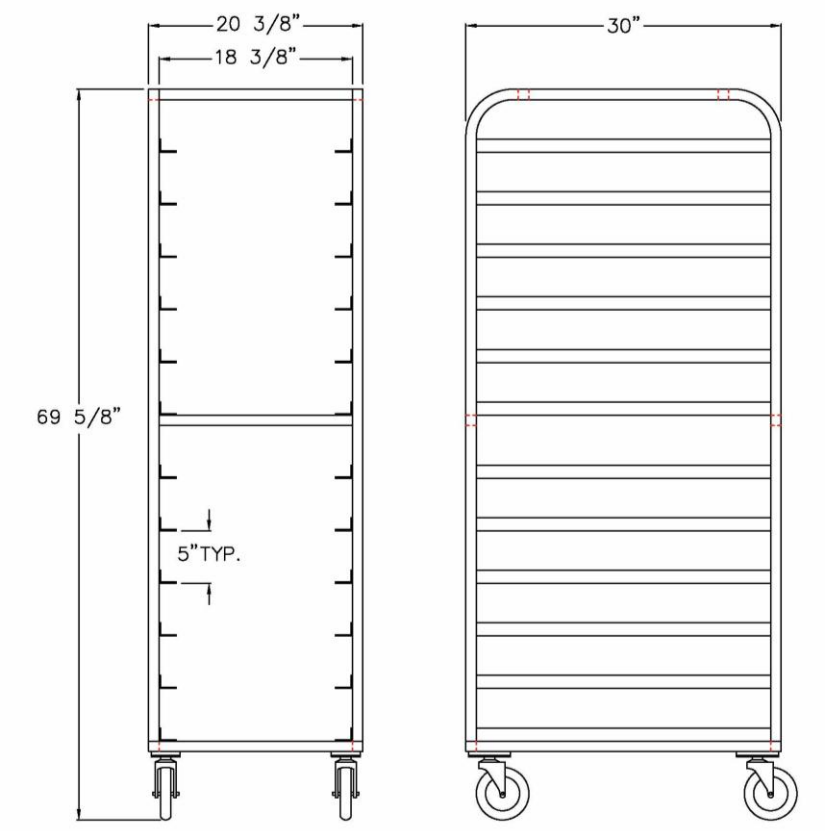

Model #97743

Model No.	Size-W	Size-H	Size-D	Pan Cap.	Runner Spacing
97743	20 3/8"	69 5/8"	30"	Below	5"
(24) 14"x18" Trays - (12) 18"x26" Trays					
97744	22 5/8"	69 5/8"	30"	24	5"
(24) 15"x20" Trays					
97745	20 3/8"	69 5/8"	30"	24	5"
(24) 14"x18" Trapezoid Trays/Round Trays					
97715	40 3/4"	70 5/8"	30"	Below	5"
(48) 13"x18" Trays - (48) 14"x18" Trays - (24) 18"x26" Trays - (48) 14"x18" Trapezoid Trays					

Phone:800-255-0104
Fax: 877-877-7687
www.newageindustrial.com
sales@newageindustrial.com

New Age Industrial reserves the right to modify or make changes at any time without notice to materials and specifications.