JOB:
ITEM:
QTY:

Made in the USA

ROUTE DELIVERY CARTS

APPLICATION:

These route delivery carts are ideal for delivering loads to storage space. These fold and store on end to maximize storage space in your route truck or store room. These carts come standard with a bolt on noise plate for quick and easy removal.



Model #RDC1850F

MATERIAL:

The framework is constructed out of 1 1/2”x 1 1/2” square tubing. Handle is constructed out of 1 1/2” diameter round tubing.

CASTERS & WHEELS:

The back casters are 5”x2” platform type swivel casters. The front two wheels are 10” Flat free(F) or Pneumatic wheels(P). These wheels have a 5/8” axle.

GUARANTEE:

These carts carry a **Lifetime Guarantee** against rust and corrosion and also carry a **Five-Year Guarantee** against workmanship and material defects.

Phone:800-255-0104
Fax: 877-877-7687
www.newageindustrial.com
sales@newageindustrial.com

New Age Industrial reserves the right to modify or make changes at any time without notice to materials and specifications.

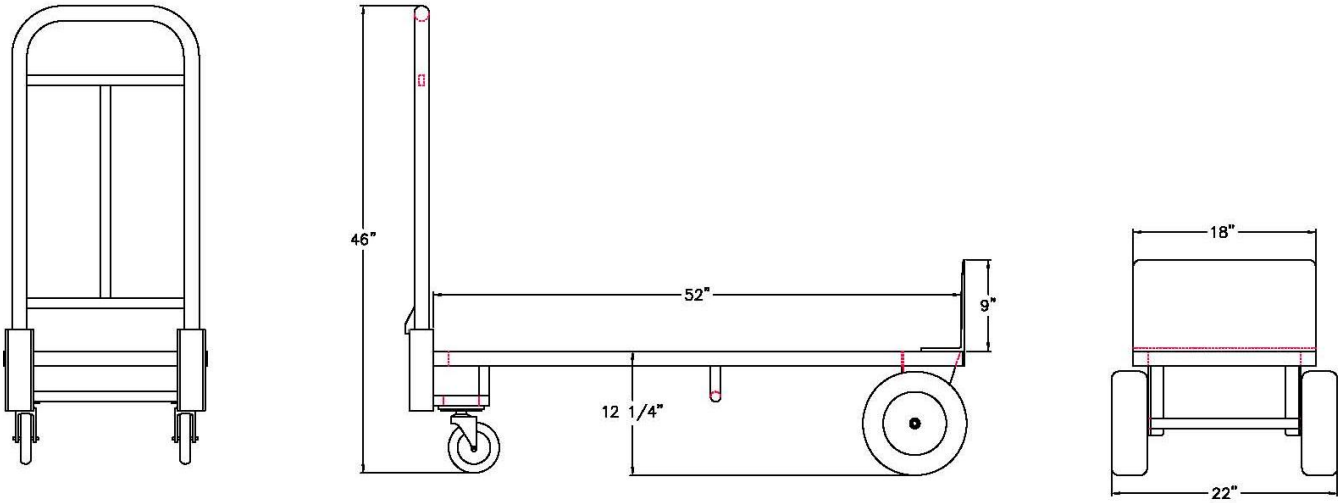

Model #RDC1850F

Model No.	Size-W	Size-H	Size-D	Position	Wt. Cap.
RDC1840F	22"	46"	43 3/4"	Unfolded	1200#
	22"	18 1/4"	43 3/4"	Folded	
RDC1850F	22"	46"	53 3/4"	Unfolded	1200#
	22"	18 1/4"	53 3/4"	Folded	
RDC1840P	22"	46"	43 3/4"	Unfolded	1200#
	22"	18 1/4"	43 3/4"	Folded	
RDC1850P	22"	46"	53 3/4"	Unfolded	1200#
	22"	18 1/4"	53 3/4"	Folded	

Phone:800-255-0104
Fax: 877-877-7687
www.newageindustrial.com
sales@newageindustrial.com

New Age Industrial reserves the right to modify or make changes at any time without notice to materials and specifications.